R. C. Tronics Incorporated

2573 East Kercher Road
Goshen, Indiana 46528
Toll Free 1-866-457-7790

Phone 1-574-642-3857
Fax 1-574-642-3858
http://www.rctronics.com

RCT-01250-0__10, 4/A, 4/B & Master Switch, GMT-560

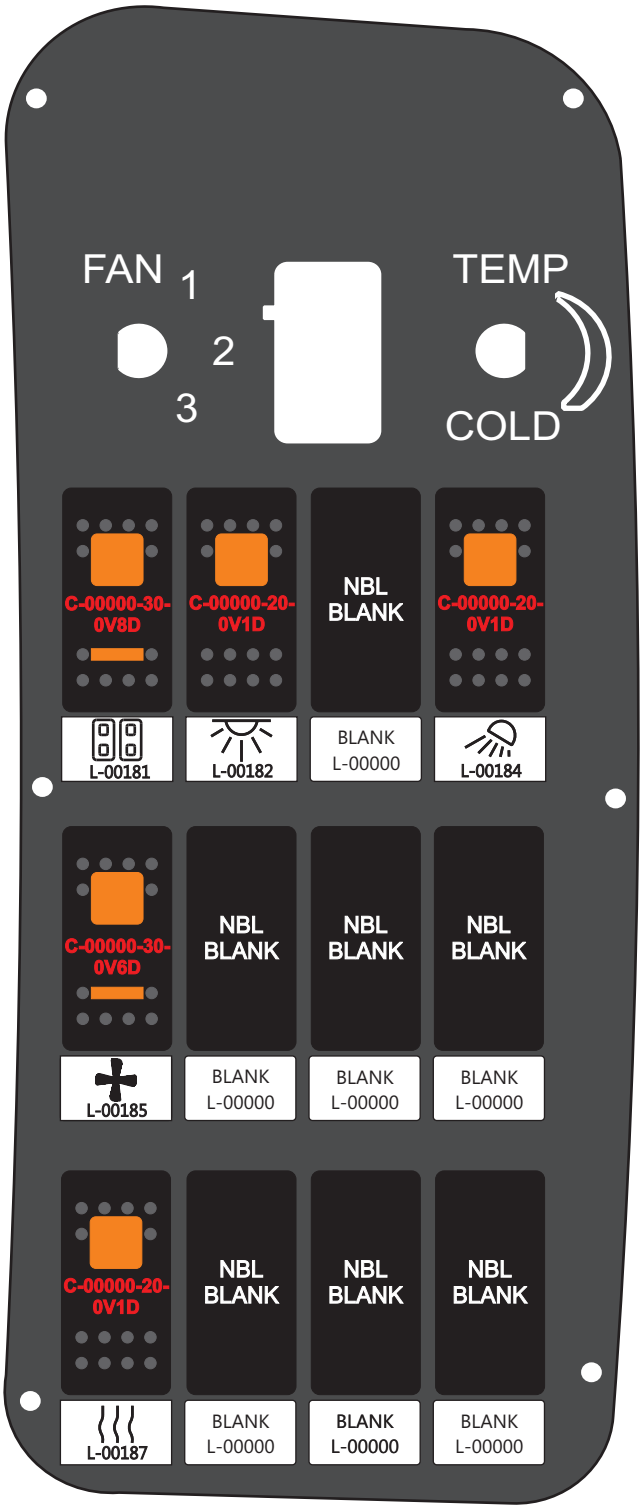
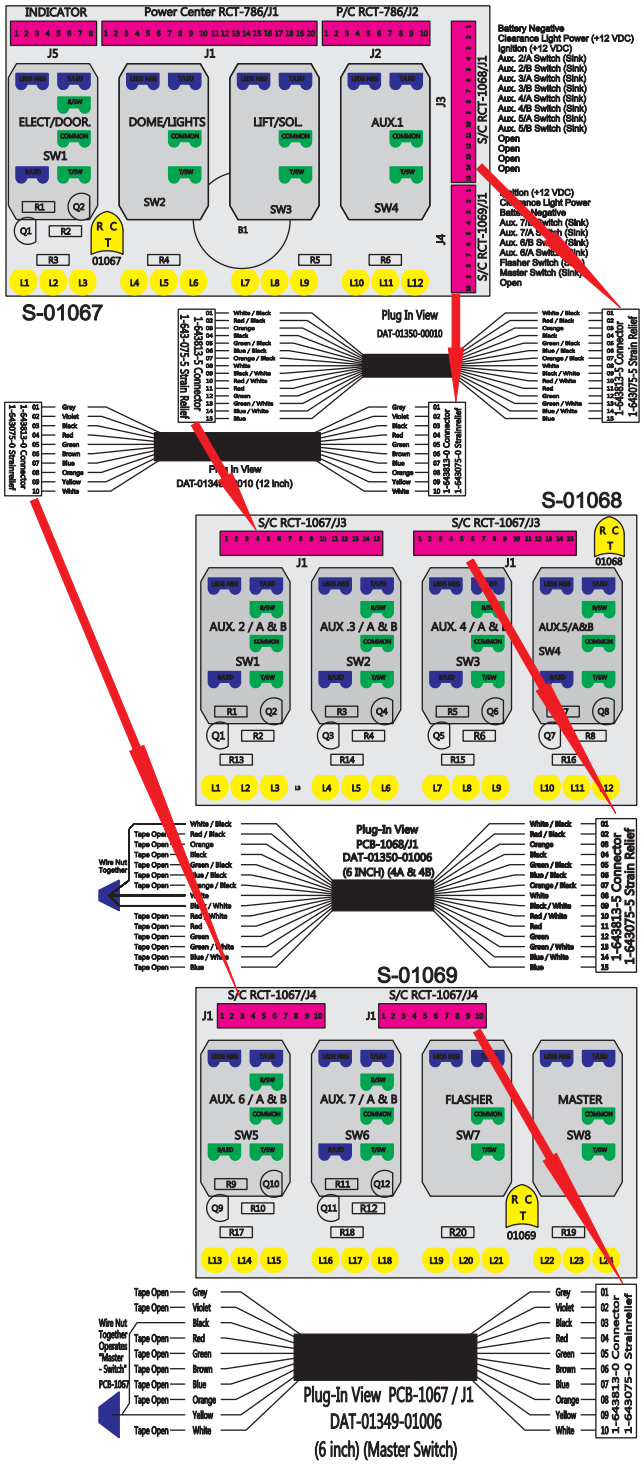
FAC-01250-0__10