R. C. Tronics Incorporated

2573 East Kercher Road
Goshen, Indiana 46528
Toll Free 1-866-457-7790

Phone 1-574-642-3857
Fax 1-574-642-3858
http://www.rctronics.com

RCT-01253-0__02, 4/A, 4/B, Master Switch, GMT-560

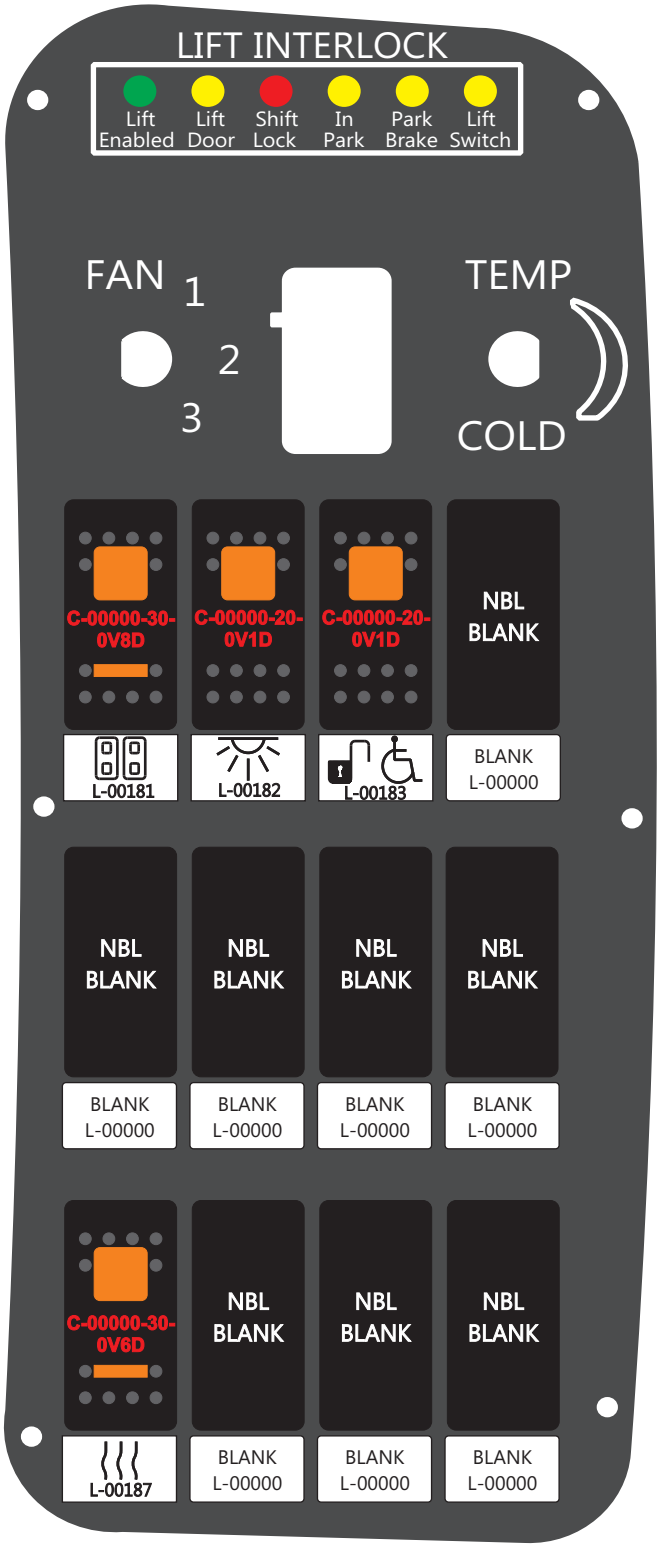

FAC-01253-00000

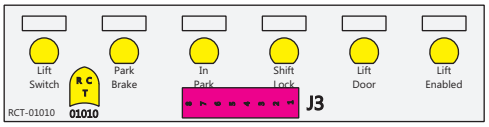

Connects to BPC.
Order Separately
DAT-01348-00XX0

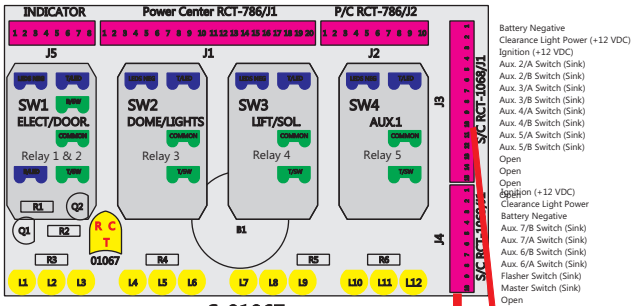

S-01067

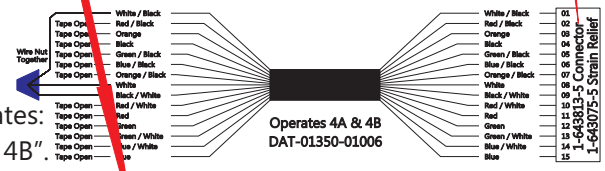

Operates:
"4A & 4B".

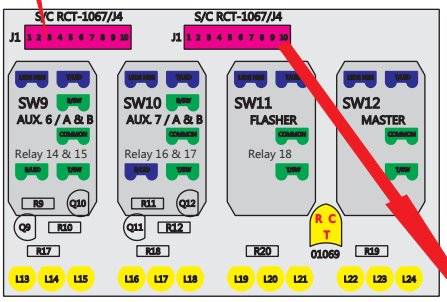

S-01069

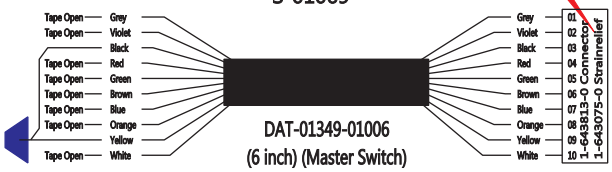

Operates:
"Master Switch".