R. C. Tronics Incorporated

2573 East Kercher Road
Goshen, Indiana 46528
Toll Free 1-866-457-7790

Phone 1-574-642-3857
Fax 1-574-642-3858
http://www.rctronics.com

RCT-01516-0_04, 4/A, 4/B, 5A, 5B Master Switch, GMT-560 Switch 8 OEM Exhaust

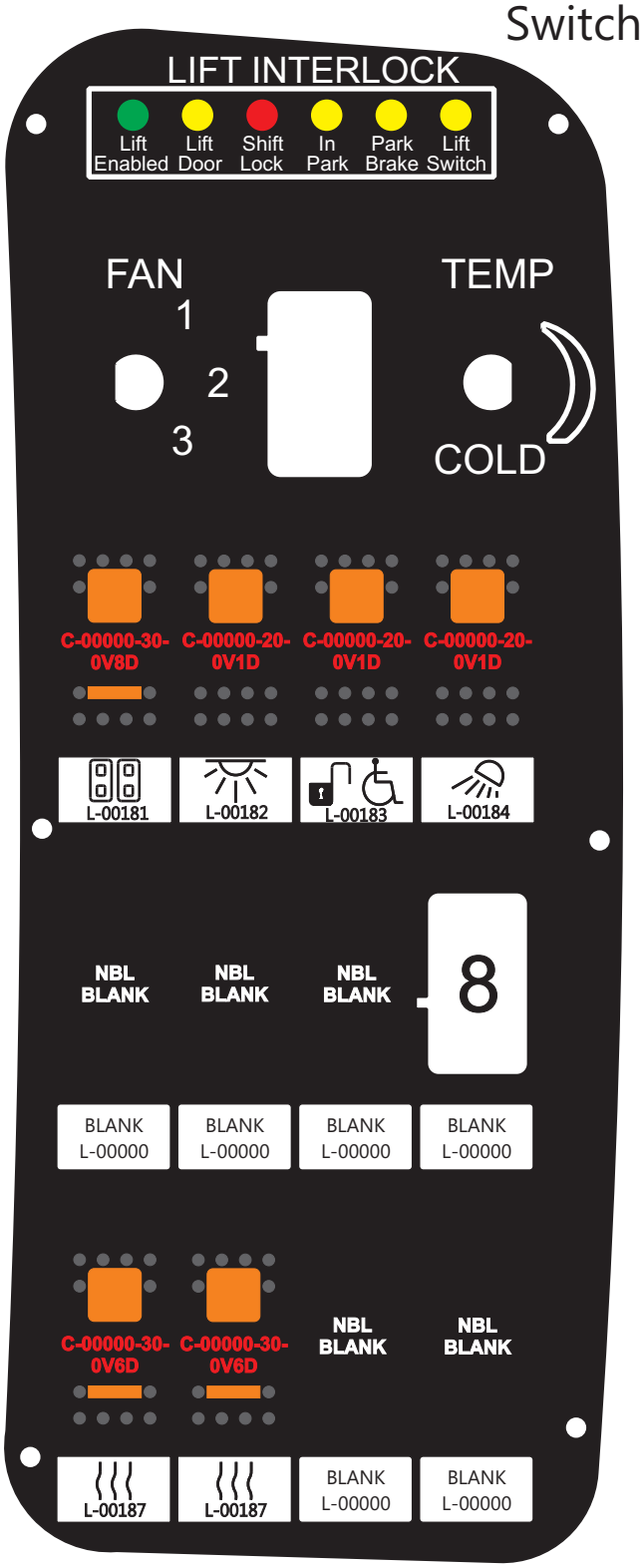

FAC-01516-00000

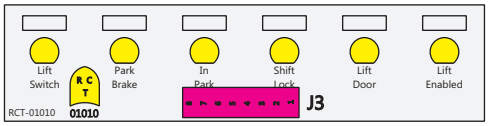

Connects to J3 of BPC
RCT-00786 or RCT-01414.
Order Separately
DAT-01348-00XX0

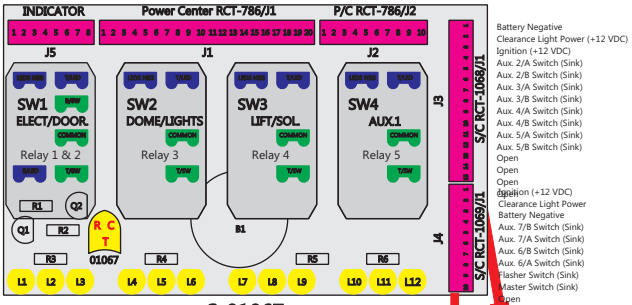

S-01067

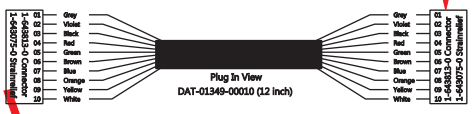

Operates:
"4A, 4B, 5A, & 5B"

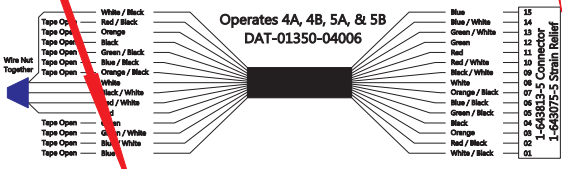

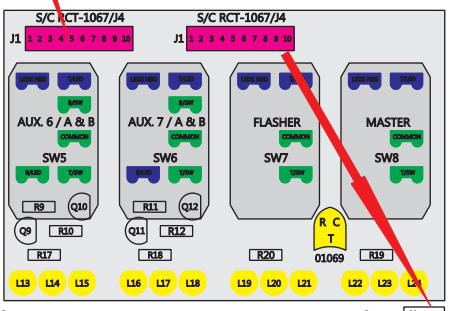
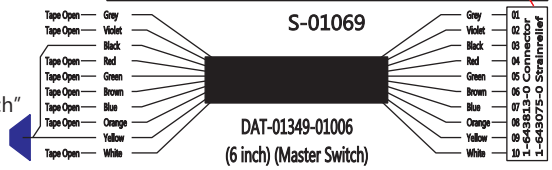
Operates:
"Master Switch"