R. C. Tronics Incorporated

2573 East Kercher Road
Goshen, Indiana 46528
Toll Free 1-866-457-7790

Phone 1-574-642-3857
Fax 1-574-642-3858
http://www.rctronics.com

RCT-01522-0__71

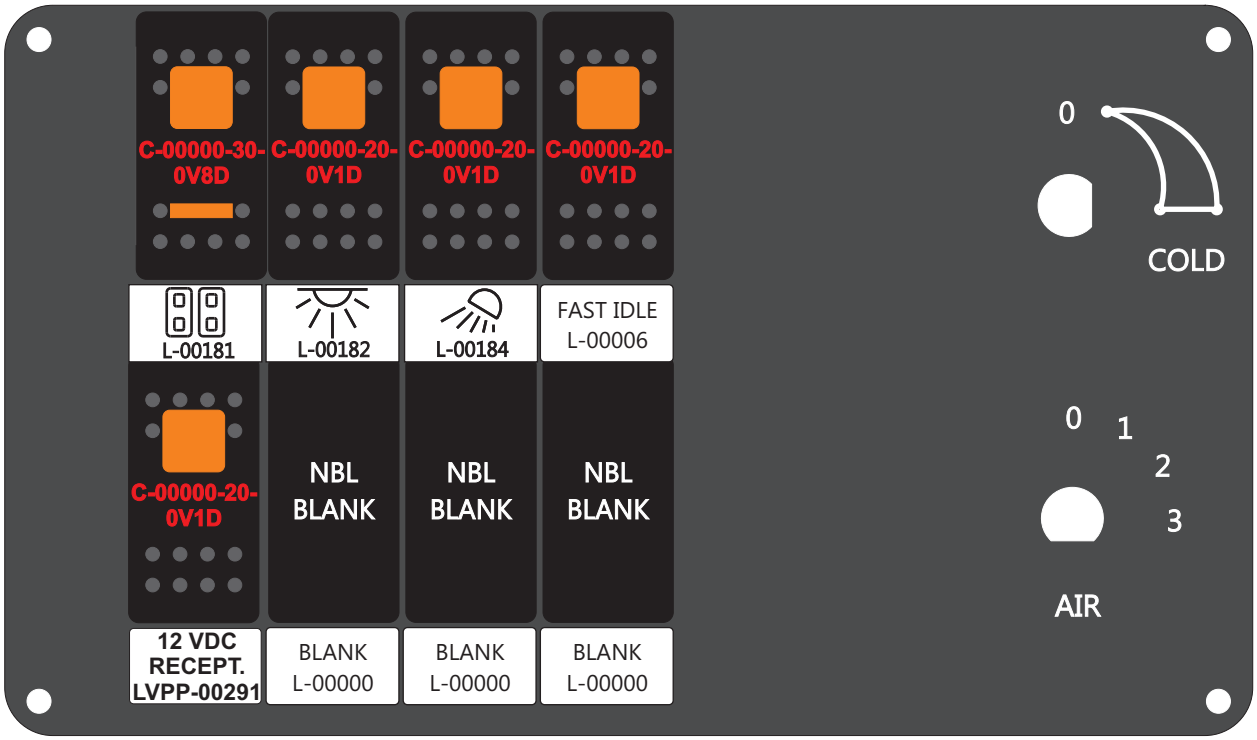

FAC-01522-00000

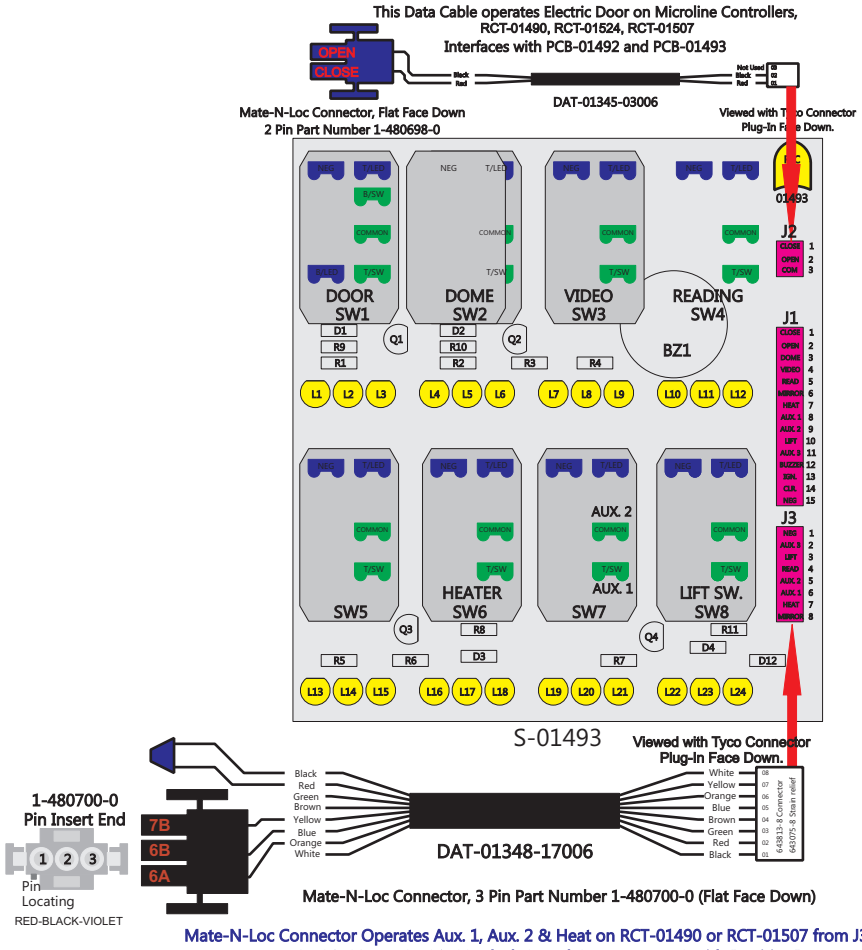

Mate-N-Loc Connector Operates Aux. 1, Aux. 2 & Heat on RCT-01490 or RCT-01507 from J3 on RCT-01492 or RCT-01493. Black & Red Operates Aux.3 with "Ignition".