# R. C. Tronics Incorporated

2573 East Kercher Road
Goshen, Indiana 46528
Toll Free 1-866-457-7790

Phone 1-574-642-3857
Fax 1-574-642-3858
http://www.rctronics.com

## RCT-02397-0__06

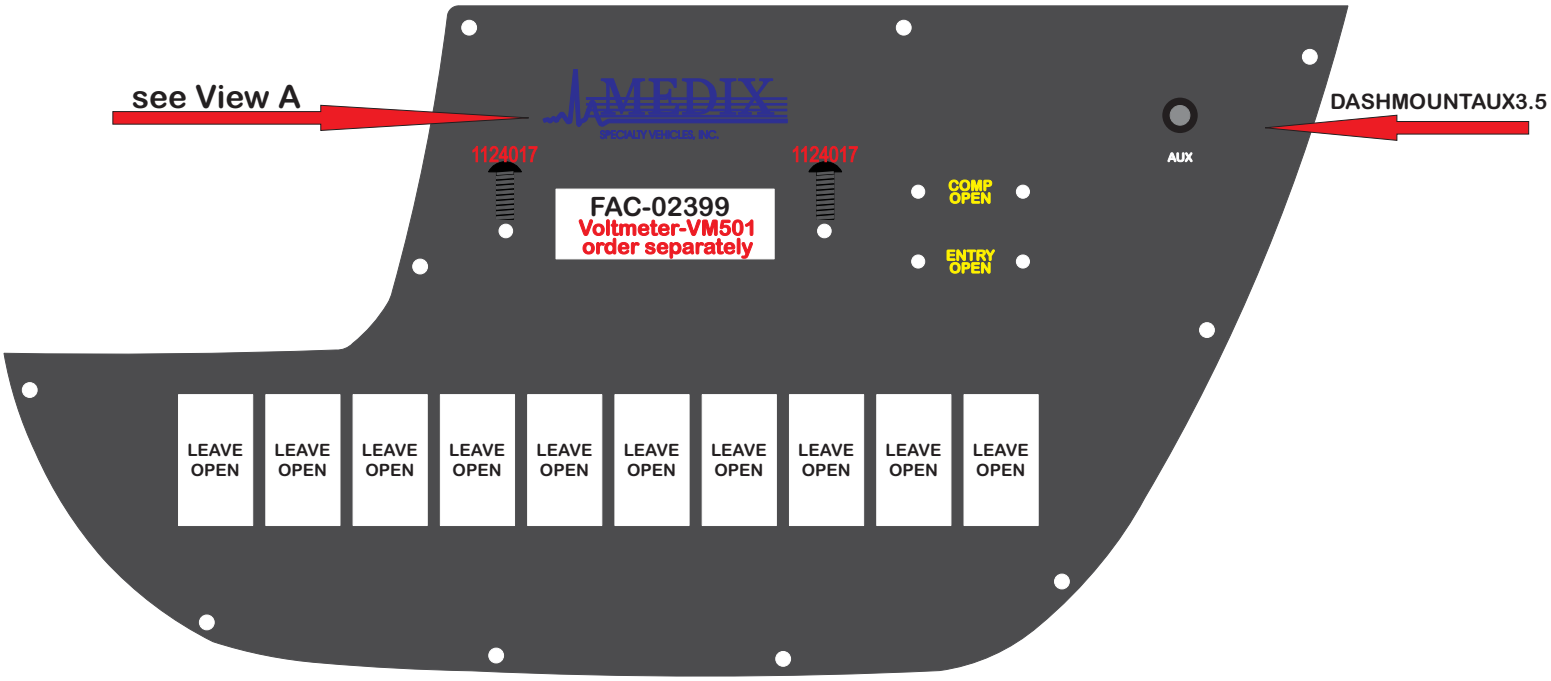

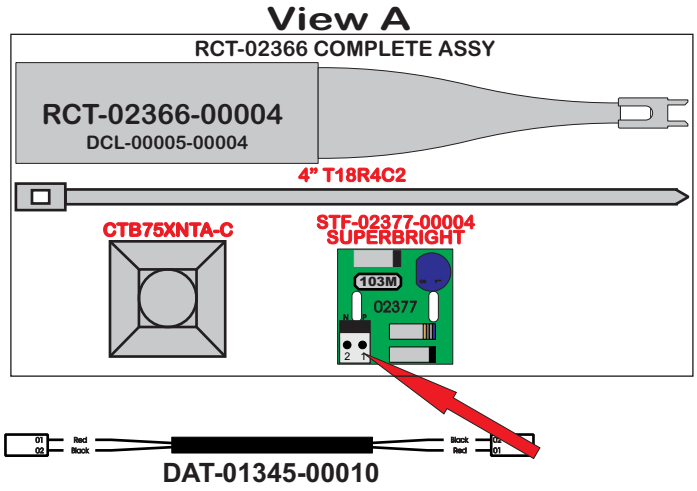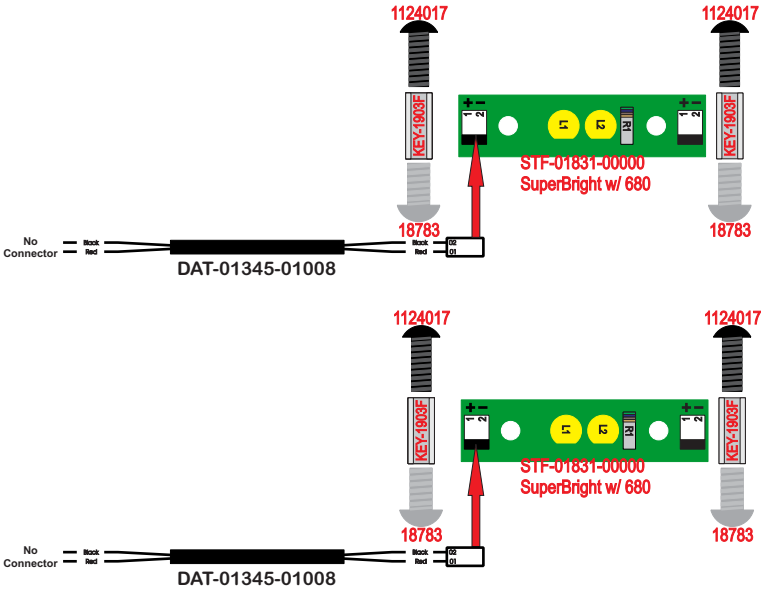
FAC-02397-00003
Size 15.399 x 7.68 inches