R. C. Tronics, Incorporated

Specializing In Electronic Controls

AUGUST 23, 2022

2573 East Kercher Road
Goshen, Indiana 46528
https://www.rctronics.com

Phone: 1-574-642-3857
Fax: 1-574-642-3858
Toll Free: 1-866-457-7790

RCT-01760-M
TRANSIT BUS BOOKLET

R. C. TRONICS INCORPORATED

2573 East Kercher Road
Goshen, Indiana 46526
https://www.rctronics.com

Phone: 1-574-642-3857
Fax 1-574--642-3858
Toll Free: 1-866-457-7790

RCT-01760-M PLUG-IN-PLAY BUS POWER CENTER EXPANDED FEATURE MICRO-RELAY SYSTEM

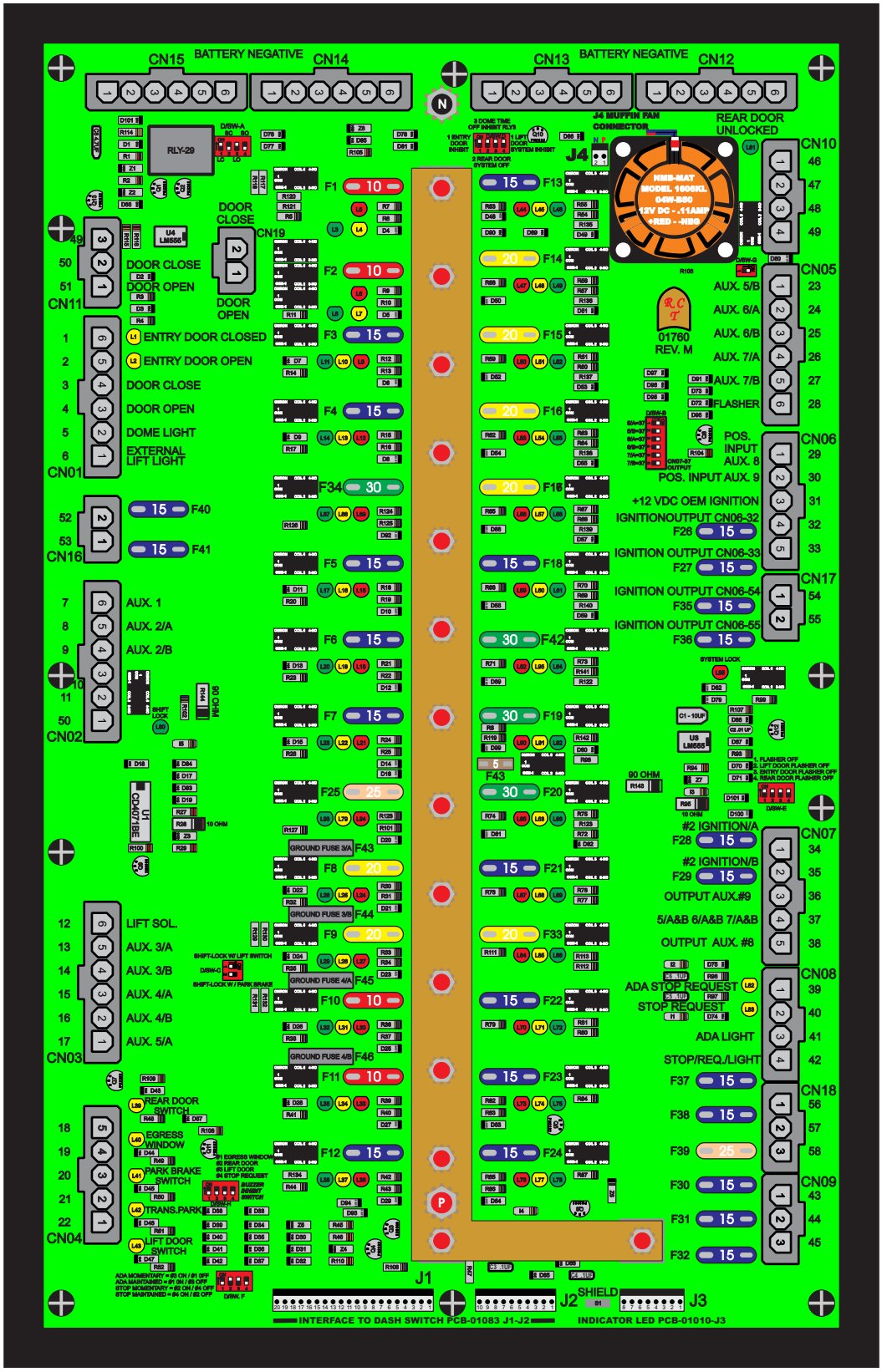

R. C. TRONICS INCORPORATED

2573 East Kercher Road
Goshen, Indiana 46526
https://www.rctronics.com

Phone: 1-574-642-3857
Fax 1-574--642-3858
Toll Free: 1-866-457-7790

RCT-01760-M PLUG-IN-PLAY BUS POWER CENTER EXPANDED FEATURE MICRO-RELAY SYSTEM

WARNING CAUTION
NO POSITIVE VOLTAGE TO, CN01-1 OR CN01-2, IT CREATES A DIRECT SHORT AND WILL DESTROY THE MAIN CONTROL.

D/SW-A; Switches 1 & 3 "ON" and Switches 2 & 4 "OFF", to operate self limiting passenger doors from the motor outputs, CN1-3 "Door Close" and CN1-4 "Door Open". (Torque, Current Limit Controller)

D/SW-A; Switches 2 & 4 "ON" and Switches 1 & 3 "OFF" to operate doors with external limit switches connected to CN01-1 "Limit Door Close" and CN01-2 "Limit Door Open".

CN11-49 Power Diode Output
CN11-50 Motor Output "Door Close"
CN11-51 Motor Output "Door Open"

CN01-1 Limit Switch "Entry Door is Closed"
CN01-2 Limit Switch "Entry Door is Open"
CN01-3 Command "Door Close"
CN01-4 Command "Door Open"
CN01-5 12 VDC Output "Dome Light"
CN01-6 12 VDC Output "External Lift Light"

CN16-52 12 VDC Output "Ignition"
CN16-53 12 VDC Output "Ignition"

CN02-7 12 VDC Output "Aux. 1"
CN02-8 12 VDC Output "Aux. 2/A"
CN02-9 12 VDC Output "Aux. 2/B"
CN02-10 Normally Closed Contact "Shift Lock"
CN02-11 Normally Open Contact "Shift Lock"
CN02-50 Common "Shift Lock"

D/SW-C Switch 1 "ON" Engages "Shift Lock" when the "Lift Switch"is "ON".
D/SW-C Switch 2 "ON" Engages "Shift Lock" when CN04-20 "Park Brake Switch" is at Battery Negative.

CN03-12 12 VDC Output "Lift Solenoid"
CN03-13 12 VDC Output "Aux. 3/A"
CN03-14 12 VDC Output "Aux. 3/B"
CN03-15 12 VDC Output "Aux. 4/A"
CN03-16 12 VDC Output "Aux. 4/B"
CN03-17 12 VDC Output "Aux. 5/A

CN04-18 Ground Input "Rear Door Switch"
CN04-19 Ground Input "Egress Windows"
CN04-20 Ground Input "Park Brake Switch"
CN04-21 Ground Input "Transmission in Park"
CN04-22 Ground Input "Lift Door Switch"

D/SW-F Switch 1 "ON" & Switch 3 "OFF" maintained ADA alarm.
D/SW-F Switch 1 "OFF" & Switch 3 "ON" momentary ADA alarm.
D/SW-F Switch 2 "OFF" & Switch 4 "ON" maintained Stop Req. Alarm.
D/SW-F Switch 2 "ON" & Switch 4 "OFF" momentary Stop Req. Alarm.

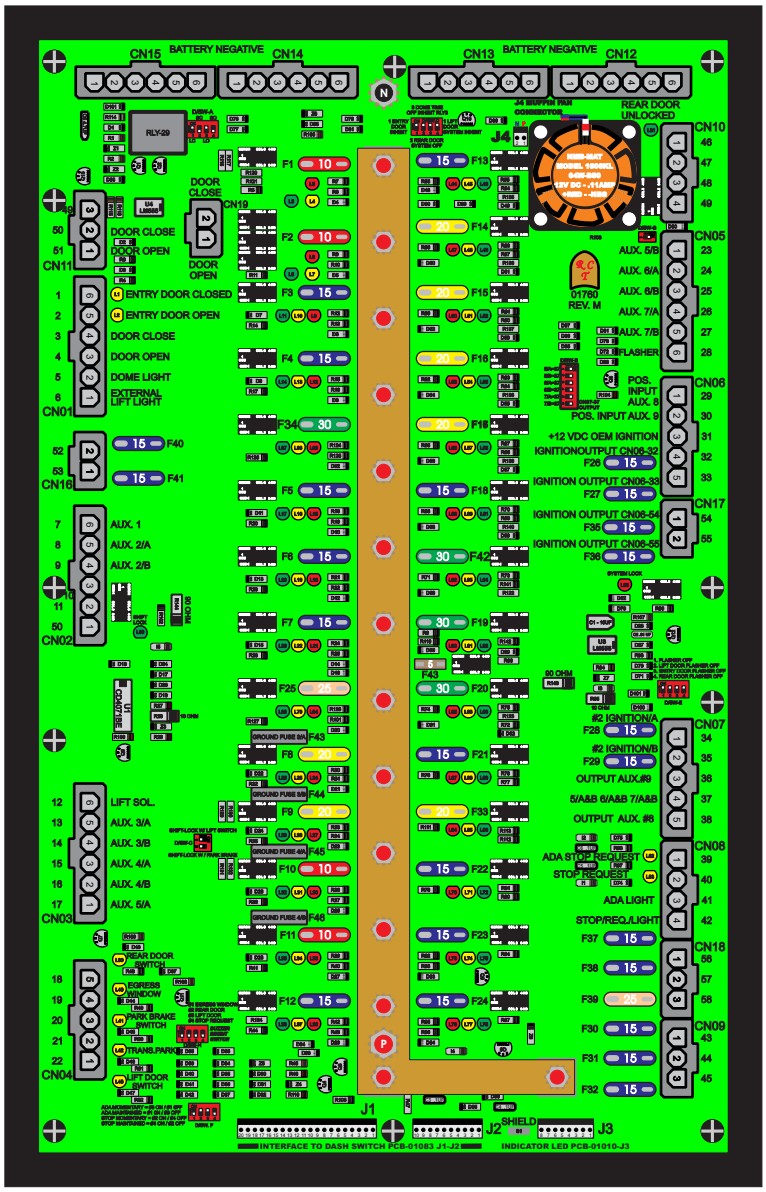

D/SW-D; Switch 1 "ON" Inhibits Door Open without "Transmission Park".
D/SW-D; Switch 2 "ON" Locks System On with "Rear Door Switch".
D/SW-D; Switch 3 "ON" Enables Automatic Dome Light On.
D/SW-D; Switch 4 "ON" Inhibits System Lock with "Lift Door Switch."

D/SW-G; Switch 1 "ON" Locks Ignition Power On when12 VDC is at CN10-47.

CN10-46 Ground Input "Rear Door Input"
CN10-47 Rear Door Lock Relay Common 12 VDC Input
CN10-48 Rear Door Lock Relay 27 Normally Open
CN10-49 Rear Door Lock Relay 27 Normally Closed

CN05-23 12 VDC Output "Aux. 5/B"
CN05-24 12 VDC Output "Aux. 6/A"
CN05-25 12 VDC Output "Aux. 6/B"
CN05-26 12 VDC Output "Aux. 7/A"
CN05-27 12 VDC Output "Aux. 7/B"
CN05-28 12 VDC Output "Flasher"

CN06-29 12 VDC Input "Aux. 8"
CN06-30 12 VDC Input "Aux. 9"
CN06-31 12 VDC Input "OEM Ignition"
CN06-32 12 VDC Output "Ignition"
CN06-33 12 VDC Output "Ignition"

CN06-54 12 VDC Output "Ignition"
CN06-55 12 VDC Output "Ignition"
D/SW-B; Provides additional 12 VDC output at CN07-37 when below listed switch placed "ON".
Switch 1 - "ON" 5A (Adds CN07-37)
Switch 2 - "ON" 5B (Adds CN07-37)
Switch 3 - "ON" 6A (Adds CN07-37)
Switch 4 - "ON" 6B (Adds CN07-37)
Switch 5 - "ON" 7A (Adds CN07-37)
Switch 6 - "ON" 7B (Adds CN07-37)

D/SW-E Switch 1 "ON" "Flashing"-"OFF" "Constant" output at CN05-28.
D/SW-E Switch 2 "ON" CN05-28 "Flasher" with "Lift Door Switch."
D/SW-E Switch 3 "ON" CN05-28 "Flasher" with "Entry Door Open".
D/SW-E Switch 4 "ON" CN05-28 "Flasher" with "Rear Door Open".
CN06-34 12 VDC Output "Ignition"
CN06-35 12 VDC Output "Ignition"
CN06-36 12 VDC Output "Aux. 9"
CN06-37 12 VDC Output operated by DSW-B
CN06-38 12 VDC Output "Aux. 8"

CN08-39 Ground Input "ADA Stop"
CN08-40 Ground Input "Stop/Req"
CN08-41 12 VDC Output "ADA Light"
CN08-42 12 VDC Output "Stop / Req. / Light"

CN18-56 12 VDC Output "Ignition"
CN18-57 12 VDC Output "Ignition"
CN18-58 12 VDC Output "Ignition"

CN09-43 12 VDC Output "Ignition"
CN09-44 12 VDC Output "Ignition"
CN09-45 12 VDC Output "Ignition"

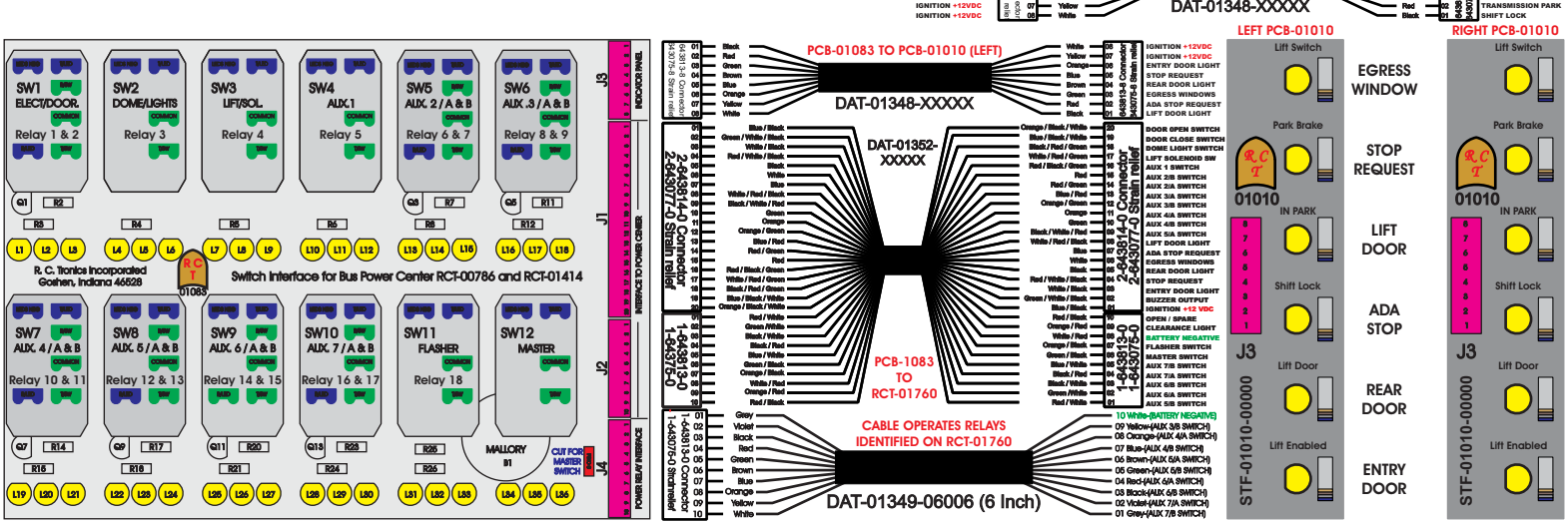

R.C. TRONICS, INCORPORATED

2573 EAST KERCHER ROAD
GOSHEN, INDIANA 46526
https://www.rctronics.com

PHONE: 1-574-642-3858
FAX: 1-574-642-3858
TOLL FREE: 1-866-457-7790

Power Center RCT-01760-M Molex Connectors

CN01
1 Door Closed Limit Input **NEG (sink)**
2 Door Open Limit Input **NEG (sink)**
3 Door Close Motor Output **NEG (sink)**
4 Door Open Motor Output **NEG (sink)**
5 Dome Light 12 VDC (+)
6 External Lift Light 12 VDC (+)

CN02
7 Aux. 1 Out 12 VDC (+)
8 Aux. 2/A Out 12 VDC (+)
9 Aux. 2/B Out 12VDC (+)
10 Shift Lock NC (ISOLATED CONTACT)
11 Shift Lock NO (ISOLATED CONTACT)
50 Shift Lock COM (ISOLATED CONTACT)

CN03
12 Lift Solenoid Output 12 VDC (+)
13 Aux. 3/A Out 12 VDC (+)
14 Aux. 3/B Out 12 VDC (+)
15 Aux. 4/A Out 12 VDC (+)
16 Aux. 4/B Out 12 VDC (+)
17 Aux. 5/A Out 12VDC (+)

CN04
18 Rear Door Switch Input **NEGATIVE (sink)**
19 Egress Window Input **NEGATIVE (sink)**
20 Park Brake Switch Input **NEGATIVE (sink)**
21 Transmission in "Park" Input **NEGATIVE (sink)**
22 Lift Door Switch Input **NEGATIVE (sink)**

CN05
23 Aux. 5/B Out 12 VDC (+)
24 Aux. 6/A Out 12 VDC (+)
25 Aux. 6/B Out 12 VDC (+)
26 Aux. 7/A Out 12 VDC (+)
27 Aux. 7/B Out 12 VDC (+)
28 "Flasher" Output 12 VDC (+)

CN06
29 Input Aux. 8 12 VDC (+)
30 Input Aux. 9 12 VDC (+)
31 Input Ignition 12 VDC (+)
32 Ignition Output 12 VDC (+)
33 Ignition Output 12 VDC (+)

CN07
34 Ignition Output 12 VDC (+)
35 Ignition Output 12 VDC (+)
36 Aux. 9 Output 12 VDC (+)
37 DSW-B Output 12 VDC (+)
38 Aux. 8 Output 12 VDC (+)

CN08
39 ADA Stop Input **NEGATIVE (sink)**
40 Stop/Req Input **NEGATIVE (sink)**
41 ADA Light Output 12 VDC (+)
42 Stop/Req Light Output 12v (+)

CN09
43 Battery Output 12 VDC (+)
44 Battery Output 12 VDC (+)
45 Battery Output 12 VDC (+)

CN10
46 Rear Door input **NEGATIVE (sink)**
47 Lock Relay Common (ISOLATED CONTACT)
48 Lock Relay N.O. (ISOLATED CONTACT)
49 Lock Relay N.C. (ISOLATED CONTACT)

CN11
49 **NEG (-)**
50 Entry Door Close Motor Output 12 VDC (+)
51 Entry Door Open Motor Output 12 VDC (+)

CN12, CN13, CN14, CN15
(6) **NEGATIVE** Each
Total of 24 Connections

CN17
54 Ignition Output 12 VDC (+)
55 Ignition Output 12 VDC (+)

CN18
56 Battery Output 12 VDC (+)
57 Battery Output 12 VDC (+)
58 Battery Output 12 VDC (+)

CN19
Entry Door Close Motor Output 12 VDC (+)
Entry Door Open Motor Output 12 VDC (+)

R.C. TRONICS, INCORPORATED

2573 EAST KERCHER ROAD
GOSHEN, INDIANA 46526
https://www.rctronics.com

PHONE: 1-574-642-3858
FAX: 1-574-642-3858
TOLL FREE: 1-866-457-7790

RCT-01760-M – DATA CONNECTORS - J1-J2-J3

POWER CENTER RCT-01760-M / J1-J2 TO DASH SWITCH PCB-01083 / J1-J2

J1-01* --** Ignition (+12 VDC) (To J3-8 and J3-7) (J2-1*** Aux. 5/B Switch) **(sink)** (To J4-5)
J1-02* --** Buzzer Output **(sink)** **(*J2-2 Aux. 6/A Switch) **(sink)** (To J4-4)
J1-03* --** Entry Door Light **(sink)** (To J3-6) ***J2-3 Aux 6/B Switch) **(sink)** (To J4-3)
J1-04* --** Stop Request **(sink)** (To J3-5) (J2-4*** Aux 7/A Switch) **(sink)** (To J4-2)
J1-05* --** Rear Door Light **(sink)** (To J3-4) (J2-5*** Aux. 7/B Switch) **(sink)** (To J4-1)
J1-06* --** Egress Windows **(sink)** (To J3-3) (J2-6*** Master Switch) **(sink)**
J1-07* --** ADA Stop Request **(sink)** (To J3-2) (J2-7*** Flasher Switch) **(sink)**
J1-08* --** Lift Door Light **(sink)** (To J3-1) (J2-8*** Battery Negative **(-)**)
J1-09* --** Aux. 5/A Switch **(sink)** (To J4-6) (J2-9*** Clearance Light Power) (+12 VDC)
J1-10* --** Aux 4/B Switch **(sink)** (To J4-7) (J2-10*** OPEN)
***J1-11* --** Aux. 4/A Switch **(sink)** (To J4-8)
***J1-12* --** Aux 3/B Switch **(sink)** (To J4-9)
***J1-13* --** Aux. 3/A Switch **(sink)**
***J1-14* --** Aux. 2/A Switch **(sink)**
***J1-15* --** Aux. 2/B Switch **(sink)**
***J1-16* --** Aux. 1 Switch **(sink)**
***J1-17* --** Lift Solenoid Switch **(sink)**
***J1-18* --** Dome Light Switch **(sink)**
***J1-19* --** Entry Door Close Switch **(sink)**
***J1-20* --** Entry Door Open Switch **(sink)**

***J2-01* --** Aux. 5/B Switch (**sink)**(J4-5)
***J2-02* --** Aux. 6/A Switch **(sink)** (To J4-4)
***J2-03* --** Aux 6/B Switch **(sink)** (To J4-3)
***J2-04* --** Aux 7/A Switch **(sink)** (To J4-2)
***J2-05* --** Aux. 7/B Switch **(sink)** (To J4-1)
***J2-06* --** Master Switch **(sink)**
***J2-07* --** Flasher Switch **(sink)**
***J2-08* --** Battery Negative **(-)**
***J2-09* --** Clearance Light Power (+12 VDC)
***J2-10* --** +12 VDC (not fused - 0-ohm resistor R47 on RCT-01760-M)

J3 Connector, Indicating Lights

J3-1 - Shift Lock **(sink)** @ 1 ampere maximum)
J3-2 - Transmission Park **(sink)** @ 1 ampere maximum)
J3-3 - Lift Enable **(sink)** @ 1 ampere maximum)
J3-4 - Park Break Set **(sink)** @ 1 ampere maximum)
J3-5 - Lift Door Open **(sink)** @ 1 ampere maximum)
J3-6 - Lift Switch On **(sink)** @ 1 ampere maximum)
J3-7 - Ignition (+12 VDC), switched)
J3-8 - Ignition (+12 VDC), switched)

R.C. TRONICS, INCORPORATED

2573 EAST KERCHER ROAD
GOSHEN, INDIANA 46526
https://www.rctronics.com

PHONE: 1-574-642-3858
FAX: 1-574-642-3858
TOLL FREE: 1-866-457-7790

DASH SWITCH PCB-01083

DASH SWITCH PCB-01083/J1-J2 TO POWER CENTER RCT-01760-M/J1-J2

J1-01* --** Ignition (+12 VDC) (To J3-8 and J3-7) (J2-1*** Aux. 5/B Switch) **(sink)** (To J4-5)
J1-02* --** Buzzer Output **(sink)** **(*J2-2 Aux. 6/A Switch) **(sink)** (To J4-4)
J1-03* --** Entry Door Light **(sink)** **(**To J3-6) ***J2-3 Aux 6/B Switch) **(sink)** (To J4-3)
J1-04* --** Stop Request **(sink)** **(**To J3-5) (J2-4*** Aux 7/A Switch) **(sink)** (To J4-2)
J1-05* --** Rear Door Light **(sink)** (To J3-4) (J2-5*** Aux. 7/B Switch) **(sink)** (To J4-1)
J1-06* --** Egress Windows **(sink)** (To J3-3) (J2-6*** Master Switch) **(sink)**
J1-07* --** ADA Stop Request **(sink)** (To J3-2) (J2-7*** Flasher Switch) **(sink)**
J1-08* --** Lift Door Light **(sink)** (To J3-1) (J2-8*** Battery Negative **(-)**)
J1-09* --** Aux. 5/A Switch **(sink)** (To J4-6) (J2-9*** Clearance Light Power) (+12 VDC)
J1-10* --** Aux 4/B Switch **(sink)** **(**To J4-7) (J2-10*** OPEN)
***J1-11* --** Aux. 4/A Switch **(sink)** (To J4-8)
***J1-12* --** Aux 3/B Switch **((sink)** (To J4-9)
***J1-13* --** Aux. 3/A Switch **(sink)**
***J1-14* --** Aux. 2/A Switch **(sink)**
***J1-15* --** Aux. 2/B Switch **(sink)**
***J1-16* --** Aux. 1 Switch **(sink)**
***J1-17* --** Lift Solenoid Switch **(sink)**
***J1-18* --** Dome Light Switch **(sink)**
***J1-19* --** Entry Door Close Switch **(sink)**
***J1-20* --** Entry Door Open Switch **(sink)**

***J2-01* --** Aux. 5/B Switch **(sink)** (To J4-5)
***J2-02* --** Aux. 6/A Switch **(sink)** (To J4-4)
J2-03 – Aux. 6/B Switch **(sink)** **(**To J4-3)
J2-04 – Aux. 7/A Switch **(sink)** (To J4-2)
***J2-05* --** Aux. 7/B Switch **(sink)** **(**To J4-1)
***J2-06* --** Master Switch **(sink)**
***J2-07* --** Flasher Switch **(sink)**
***J2-08* --** Battery Negative (-)
***J2-09* --** Clearance Light Power (+12 VDC)
***J2-10* --** +12 VDC (not fused - 0-ohm resistor R47 on RCT-01760-M)

J3 Connector, Indicating Lights

J3-1 Lift Door Light, **(sink)** @ 1 ampere maxim) (From J1-8)
J3-2 ADA Stop Request, **(sink)** @ 1 ampere maxim) (From J1-7)
J3-3 Egress Windows, **(sink)** @ 1 ampere) (From J1-6)
J3-4 Rear Door Light, **(sink)** **@** 1 ampere) (From J1-5)
J3-5 Stop Request, **(sink)** @ 1 ampere) (From J1-4)
J3-6 Entry Door Light, **(sink)** @ 1 ampere) (From J1-3)
J3-7 Ignition (+12 VDC), switched) (From J1-1)
J3-8 Ignition (+12 VDC), switched) (From J1-1)

J4 Connector, Spare Relays on Power Center PCB.

J4-1 Aux 7/B Switch **(sink)** (From J2-5)
J4-2 Aux 7/A Switch **(sink)** (From J2-4
J4-3 Aux 6/B Switch **(sink)** (From J2-3)
J4-4 Aux 6/A Switch **(sink)** **(**From J2-2)
J4-5 Aux 5/B Switch **(sink)** (From J2-1)
J4-6 Aux 5/A Switch **(sink)** (From J1-9)
J4-7 Aux 4/B Switch **(sink)** (From J1-10)
J4-8 Aux 4/A Switch **(sink)** (From J1-11)
J4-9 Aux 3/B Switch **(sink)** (From J1-12)
J4-10 Battery Negative **(-)**

R.C. TRONICS, INCORPORATED

2573 EAST KERCHER ROAD
GOSHEN, INDIANA 46526
https://www.rctronics.com

PHONE: 1-574-642-3858
FAX: 1-574-642-3858
TOLL FREE: 1-866-457-7790

INDICATOR LIGHTS PCB-01010-J3 TO POWER CENTER RCT-01760-M / J3

1. Shift Lock. **(sink)** @ 1 ampere maximum
2. Transmission Park. **(sink)** @ 1 ampere maximum
3. Lift Enable. **(sink)** @ 1 ampere maximum
4. Park Brake Set. **(sink)** @ 1 ampere maximum
5. Lift Door Open. **(sink)** @ 1 ampere maximum
6. Lift Switch On. **(sink)** @ 1 ampere maximum
7. Ignition (+12 VDC, switched)
8. Ignition (+12 VDC, switched)

FACEPLATE NOMENCLATURE LEFT TO RIGHT ON PCB-01010

1. LIFT SWITCH
2. PARK BRAKE
3. IN PARK
4. SHIFT LOCK
5. LIFT DOOR
6. LIFT ENABLED

R.C. TRONICS, INCORPORATED

2573 EAST KERCHER ROAD
GOSHEN, INDIANA 46526
https://www.rctronics.com

PHONE: 1-574-642-3858
FAX: 1-574-642-3858
TOLL FREE: 1-866-457-7790

SWITCH CENTER RCT-01083 / J3 CONNECTION TO PCB-01010

1. Lift Door Light, **(sink)** @ 1 ampere maximum
2. ADA Stop Request, **(sink)** @ 1 ampere maximum
3. Egress Windows, **(sink)** @ 1 ampere maximum
4. Rear Door Light, **(sink)** @ 1 ampere maximum
5. Stop Request, **(sink)** @ 1 ampere maximum
6. Entry Door Light, **(sink)** @ 1 ampere maximum
7. Ignition (+12 VDC, switched)
8. Ignition (+12 VDC, switched)

PCB-01010 RENAMED

1. Shift Lock to; “ADA STOP”
2. In Park to; “LIFT DOOR”
3. Lift Enabled to; “ENTRY DOOR”
4. Park Brake to; “STOP REQUEST”
5. Lift Door to; “REAR DOOR”
6. Lift Switch to; “EGRESS WINDOW”

PCB-01083 FACEPLATE RENAME LEFT TO RIGHT

1. EGRESS WINDOW
2. STOP REQUEST
3. LIFT DOOR
4. ADA STOP
5. REAR DOOR
6. ENTRY DOOR

R.C. TRONICS, INCORPORATED

2573 EAST KERCHER ROAD
GOSHEN, INDIANA 46526
https://www.rctronics.com

PHONE: 1-574-642-3857
FAX: 1-574-642-3858
TOLL FREE: 1-866-457-7790

RCT-01760-M DIP SWITCH A, ELECTRIC DOOR OPEN AND CLOSE SETTING.

Friday, March 24, 2023

D/SWA-1 (ON): Generates Internal Ground Output for, “Entry Door is Closed” at CN01-1.
D/SWA-2 (OFF): Removes the ability to limit travel of “Door Close”. Output CN01-3 “ON” with “Switch Close”.
D/SWA-3 (ON): Generates Internal Ground Output for, “Entry Door is Open” at CN01-2.
D/SWA-4 (OFF): Removes the ability to limit travel of “Door Open”. Output CN01-4 “ON” with “Switch Open”.

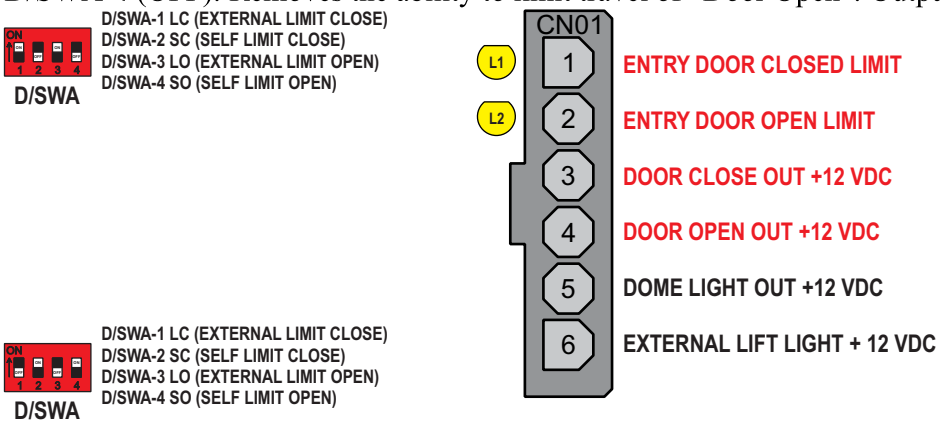

D/SWA-1 (OFF): Generates External Ground Output for, “Entry Door is Closed” at CN01-1.
D/SWA-2 (ON): Provides the ability to limit travel of “Door Close”. Output CN01-3 “ON” with “Switch Close”.
D/SWA-3 (OFF): Generates External Ground Output for, “Entry Door is Open” at CN01-2.
D/SWA-4 (OFF): Provides the ability to limit travel of “Door Open”. Output CN01-4 “ON” with “Switch Open”.

LOCATION: TOP LEFT OF RCT-01760-M

1. NOTE: D/SW-A; Switches 2 & 4 “ON” and Switches 1 & 3 “OFF” to operate doors with external limit switches connected to CN01-1 “Limit Door Close” and CN01-2 “Limit Door Open”.
2. NOTE: D/SW-A; Switches 1 & 3 “ON” and Switches 2 & 4 “OFF”, to operate self-limiting passenger doors from the motor outputs, CN1-3 “Door Close” and CN1-4 “Door Open”. (Torque, Current Limit Controller)

R.C. TRONICS, INCORPORATED

2573 EAST KERCHER ROAD
GOSHEN, INDIANA 46526
https://www.rctronics.com

PHONE: 1-574-642-3857
FAX: 1-574-642-3858
TOLL FREE: 1-866-457-7790

RCT-01760 DIP-M SWITCH B, AUX 5-6-7 A & B ADD CN07-37 SETTING.

Saturday, March 25, 2023

D/SWB-1 (OFF): CN03-17 12 VDC Output "Aux. 5/A / no output at / CN07 -37 +12 VDC DISABLED
D/SWB-2 (OFF): CN05-23 12 VDC Output "Aux. 5/B / no output at / CN07-37 +12 VDC DISABLED
D/SWB-3 (OFF): CN05-24 12 VDC Output "Aux. 6/A / no output at / CN07 -37 +12 VDC DISABLED
D/SWB-4 (OFF): CN05-25 12 VDC Output "Aux. 6/B / no output at / CN07 -37 +12 VDC DISABLED
D/SWB-5 (OFF): CN05-26 12 VDC Output "Aux. 7/A / no output at / CN07 -37 +12 VDC DISABLED
D/SWB-6 (OFF): CN05-27 12 VDC Output "Aux. 7/B / no output at / CN07 -37 +12 VDC DISABLED

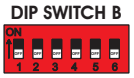

D/SWB-1 5/A
D/SWB-2 5/B
D/SWB-3 6/A
D/SWB-4 6/B
D/SWB-5 7/A
D/SWB-6 7/B

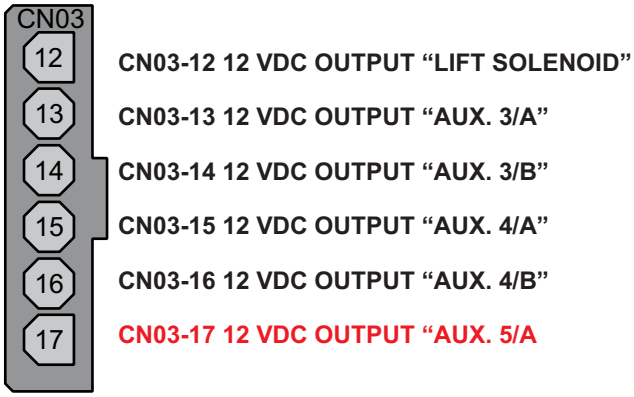

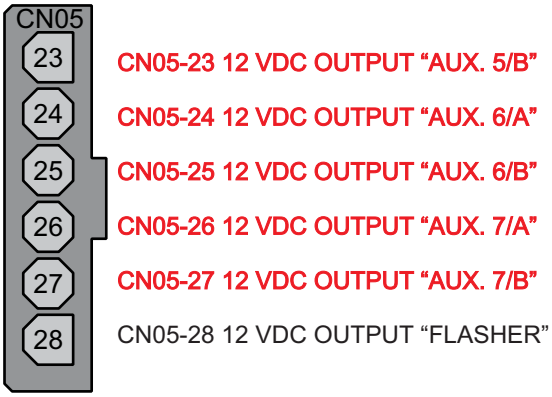

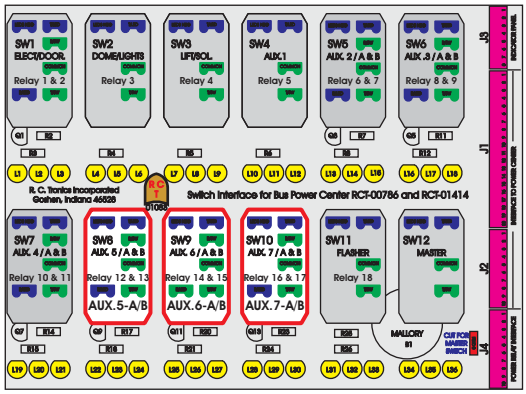

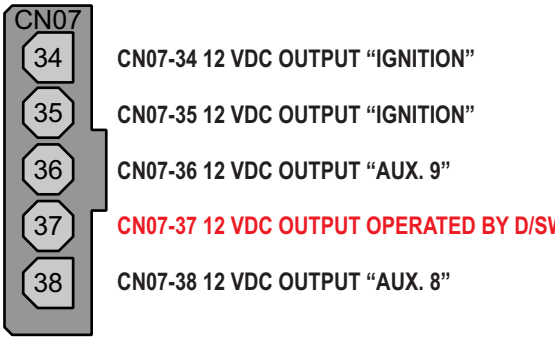

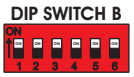

D/SWB-1 5/A
D/SWB-2 5/B
D/SWB-3 6/A
D/SWB-4 6/B
D/SWB-5 7/A
D/SWB-6 7/B

D/SWB-1 (ON): CN03-17 12 VDC Output "Aux. 5/A /output at / CN07 -37 +12 VDC ENABLED
D/SWB-2 (ON): CN05-23 12 VDC Output "Aux. 5/B /output at / CN07 -37 +12 VDC ENABLED
D/SWB-3 (ON): CN05-24 12 VDC Output "Aux. 6/A /output at / CN07 -37 +12 VDC ENABLED
D/SWB-4 (ON): CN05-25 12 VDC Output "Aux. 6/B /output at / CN07 -37 +12 VDC ENABLED
D/SWB-5 (ON): CN05-26 12 VDC Output "Aux. 7/A /output at / CN07 -37 +12 VDC ENABLED
D/SWB-6 (ON): CN05-27 12 VDC Output "Aux. 7/B /output at / CN07 -37 +12 VDC ENABLED

LOCATED: 1/3 DOWN RIGHT SIDE OF RCT-01760-M

1. NOTE: This circuit was designed to accommodate up to three heating zones and output 12 volt output to a pump, (CN07-37) so as to provide heating, front, center and rear of the vehicle seating sections. In addition utilizing balance of dash mounted switches in event of single or double zoned heating arraingements.

R.C. TRONICS, INCORPORATED

2573 EAST KERCHER ROAD
GOSHEN, INDIANA 46526
https://www.rctronics.com

PHONE: 1-574-642-3857
FAX: 1-574-642-3858
TOLL FREE: 1-866-457-7790

RCT-01760-M DIP SWITCH C, "SHIFT-LOCK" with, "LIFT SWITCH" or "PARK-BRAKE SWITCH".
Saturday, April 1, 2023

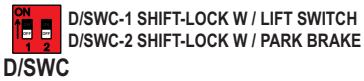

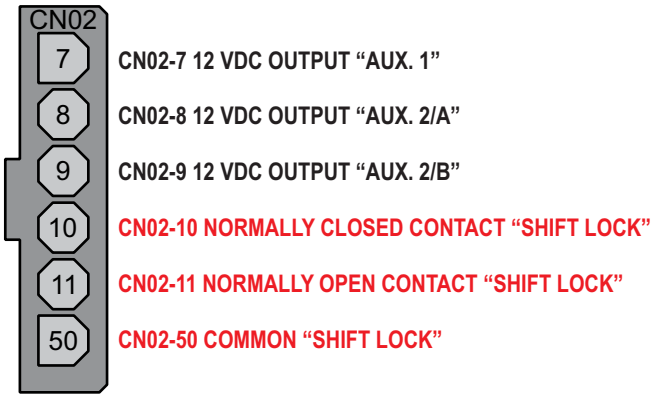

1. NOTE: This circuit was designed to lock, "Shift Lock" so that vehicle cannot be placed into any drive command if D/SW 1, "Lift Switch" is set "ON" and/or D/SW 2, "Park Brake" is set "ON".

<u>DIP SWITCH C LOCATED: 2/3 DOWN LEFT SIDE OF RCT-01760-M</u>

R.C. TRONICS, INCORPORATED

2573 EAST KERCHER ROAD
GOSHEN, INDIANA 46526
https://www.rctronics.com

PHONE: 1-574-642-3857
FAX: 1-574-642-3858
TOLL FREE: 1-866-457-7790

RCT-01760-M DIP SWITCH D, ENTRY DOOR-REAR DOOR-DOME LIGHT-LIFT DOOR SETTING.

Saturday, April 1, 2023

D/SWD-1 (ON): Inhibits operation of, “Entry Door”, without, “Transmission in Park”, CN04-21, Led “ON’.
D/SWD-1 (OFF): “Entry Door” operates without “Transmission in Park”, CN04-21, Led “OFF’.
D/SWD-2 (ON): “Rear Door” CN10-46 ajar, open, will lock RCT system “ON”, not permitting it to shut down.
D/SWD-2 (OFF): “Rear Door” CN10-46 ajar, open, will not lock RCT system but will shut down without ignition.
D/SWD-3 (ON): Inhibits operation of interior, “Dome Lights”, with operation of, “Entry Door”.
D/SWD-3 (OFF): Enables operation of interior, “Dome Lights”, with operation of, “Entry Door”.
D/SWD-4 (ON): “Lift Door” ajar, open, will lock RCT system “ON”, not permitting it to shut down.
D/SWD-4 (OFF): “Lift Door” ajar, open, will not lock RCT system “ON”, will shut down by removing ignition.

D/SWD-1 ENTRY DOOR INHIBIT
D/SWD-2 REAR DOOR SYSTEM OFF
D/SWD-3 DOME TIME OFF INHIBIT RLY3
D/SWD-4 LIFT DOOR SYSTEM INHIBIT

LOCATION: TOP LEFT CENTER OF RCT-01760-M

1. NOTE: “System Lock” will not permit, shut a system shut down, either by removing “Master Switch” or “Ignition”. “Rear Door” and/or “Lift Door” mut be checked and secured.
2. NOTE: “Entry Door” with “Entry Door Inhibit”, D/SW-1 (ON) a sink input is at, “Transmission in Park”, CN04-21, Led “ON’. This insures that vehicle cannot move during passenger loading.

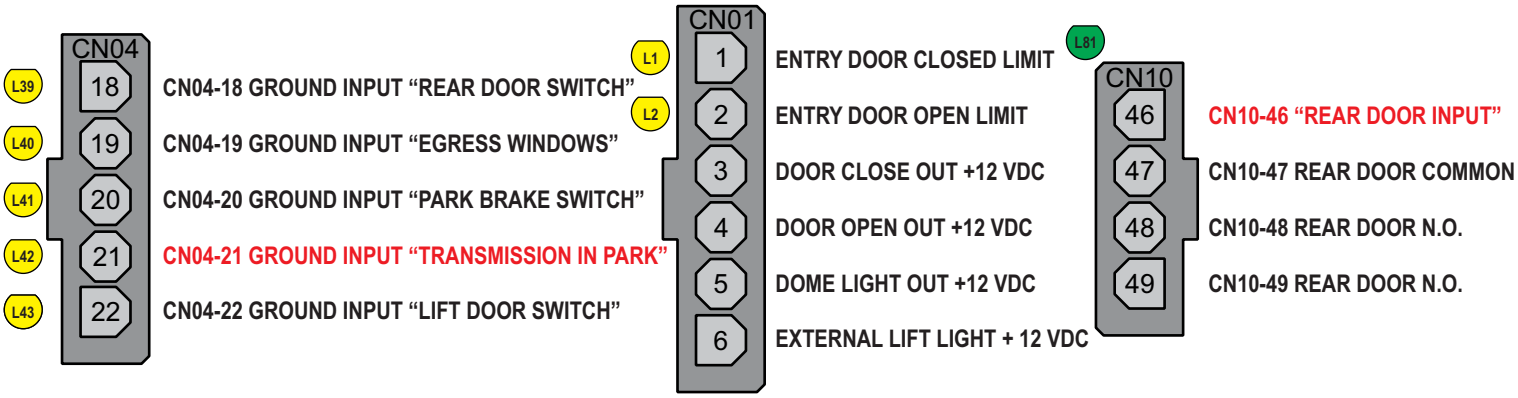

R.C. TRONICS, INCORPORATED

2573 EAST KERCHER ROAD
GOSHEN, INDIANA 46526
https://www.rctronics.com

PHONE: 1-574-642-3857
FAX: 1-574-642-3858
TOLL FREE: 1-866-457-7790

RCT-01760-M DIP SWITCH E, LIFT DOOR-ENTRY DOOR-REAR DOOR ON OFF SETTING.

Saturday, April 1, 2023

D/SWE-1 (ON): “Flasher Off”, constant output at CN05-28.
D/SWE-1 (OFF): “Flasher ON”, alternating output at CN05-28.
D/SWE-2 (ON): “Flasher” with “Lift Door Switch”, alternating output at CN05-28.
D/SWE-2 (OFF): “Flasher” with “Lift Door Switch”, inhibits output at CN05-28.
D/SWE-3 (ON): “Flasher” with “Entry Door Switch”, alternating output at CN05-28.
D/SWE-3 (OFF): “Flasher” with “Entry Door Switch”, inhibits output at CN05-28.
D/SWE-4 (ON): “Flasher” with “Rear Door Switch”, alternating output at CN05-28.
D/SWE-4 (OFF): “Flasher” with “Rear Door Switch”, inhibits output at CN05-28.

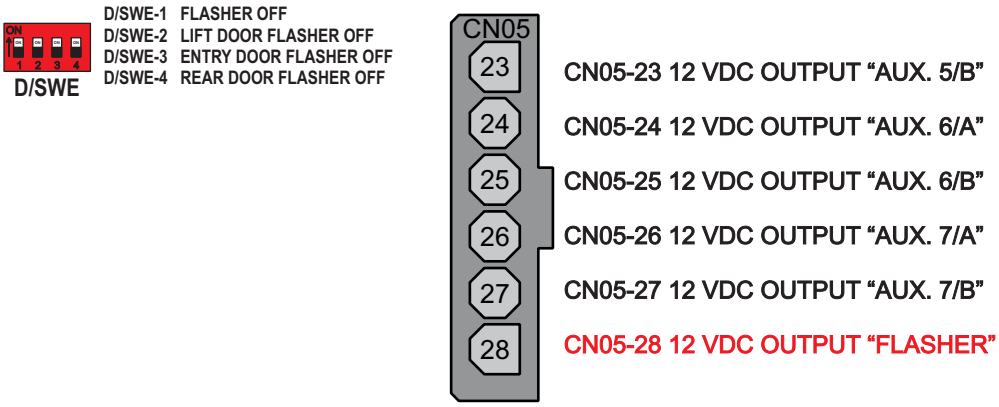

LOCATION: RIGHT SIDE CENTER OF RCT-01760-M

1. NOTE: D/SWE-1 (OFF) provides constant output at CN05-28, with D/SWE-2 (ON) “Lift Door Switch”, D/SWE-3 (ON) “Entry Door Switch”, and/or D/SWE-4 (ON) “Rear Door Switch”.
2. NOTE: With D/SWITCH E 1 thru 4 “OFF”, output CN05-28 may be used as a normal output.

R.C. TRONICS, INCORPORATED

2573 EAST KERCHER ROAD
GOSHEN, INDIANA 46526
https://www.rctronics.com

PHONE: 1-574-642-3857
FAX: 1-574-642-3858
TOLL FREE: 1-866-457-7790

RCT-01760-M DIP SWITCH F ADA AND STOP REQUEST MAINTAINED OR MOMENTARY.

Saturday, April 1, 2023

ADA, "STOP REQUEST", D/SWF SETTINGS

D/SW-F Switch 1 "ON" & Switch 3 "OFF" maintained alarm, **"ADA STOP REQUEST"**.

D/SWF

D/SWF-1 ADA MAINTAINED BUZZER
D/SWF-2 STOP MOMENTARY BUZZER
D/SWF-3 ADA MOMENTARY BUZZER
D/SWF-4 STOP MAINTAINED BUZZER
NOTE: ADA AND STOP SHOWN MAINTAINED

D/SW-F Switch 1 "OFF" & Switch 3 "ON" momentary alarm, **"ADA STOP REQUEST"**.

D/SWF

D/SWF-1 ADA MAINTAINED BUZZER
D/SWF-2 STOP MOMENTARY BUZZER
D/SWF-3 ADA MOMENTARY BUZZER
D/SWF-4 STOP MAINTAINED BUZZER
NOTE: ADA AND STOP SHOWN MOMENTARY

PASSANGER, "STOP REQUEST", D/SWF SETTINGS

D/SW-F Switch 2 "OFF" & Switch 4 "ON", maintained alarm, **"STOP REQUEST"**.

D/SWF

D/SWF-1 ADA MAINTAINED BUZZER
D/SWF-2 STOP MOMENTARY BUZZER
D/SWF-3 ADA MOMENTARY BUZZER
D/SWF-4 STOP MAINTAINED BUZZER
NOTE: ADA AND STOP SHOWN MAINTAINED

D/SW-F Switch 2 "ON" & Switch 4 "OFF", momentary alarm, **"STOP REQUEST"**.

D/SWF

D/SWF-1 ADA MAINTAINED BUZZER
D/SWF-2 STOP MOMENTARY BUZZER
D/SWF-3 ADA MOMENTARY BUZZER
D/SWF-4 STOP MAINTAINED BUZZER
NOTE: ADA AND STOP SHOWN MOMENTARY

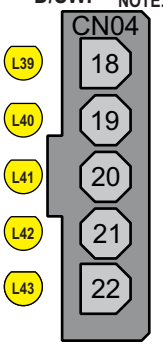

CN04-18 GROUND INPUT "REAR DOOR SWITCH".

CN04-19 GROUND INPUT "EGRESS WINDOWS".

CN04-20 GROUND INPUT "PARK BRAKE SWITCH".

CN04-21 GROUND INPUT "TRANSMISSION IN PARK".

CN04-22 GROUND INPUT "LIFT DOOR SWITCH".

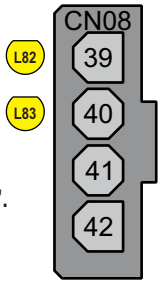

CN08-39 GROUND INPUT "ADA STOP REQUEST".

CN08-40 GROUND INPUT "STOP REQUEST".

CN08-41 12 VDC OUTPUT "ADA STOP REQUEST LIGHT".

CN08-42 12 VDC OUTPUT "STOP REQUEST LIGHT".

LOCATION: BOTTOM LEFT SIDE OF RCT-01760-M

1. NOTE: "ADA Stop Request", at input CN08-39, latches audible buzzer, cancels only with input at "Lift Door Switch", CN04-22.
2. NOTE: "Passenger Stop Request", at CN08-40, latches audible buzzer, cancels only with operation of dash mounted, "Door Open/Close Switch".

R.C. TRONICS, INCORPORATED

2573 EAST KERCHER ROAD
GOSHEN, INDIANA 46526
https://www.rctronics.com

PHONE: 1-574-642-3857
FAX: 1-574-642-3858
TOLL FREE: 1-866-457-7790

RCT-01760-M DIP SWITCH G SYSTEM LOCK WITH UNLOCKED, REAR DOOR.

Saturday, April 1, 2023

D/SW-G; Switch 1 “ON” Locks System Power “On” when 12 VDC is at CN10-47.

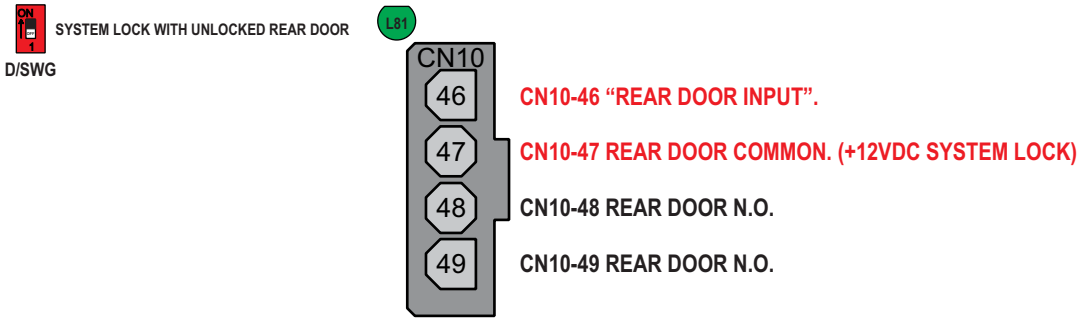

LOCATION: RIGHT TOP SIDE OF RCT-01760-M

1. NOTE: Green Led “ON” indicates, “Rear Door” ajar or unlocked and + 12 VDC present at CN10-47 system will remain powered. Removing ignition input at CN06-31 will have no effect.

R.C. TRONICS, INCORPORATED

2573 EAST KERCHER ROAD
GOSHEN, INDIANA 46526
https://www.rctronics.com

PHONE: 1-574-642-3857
FAX: 1-574-642-3858
TOLL FREE: 1-866-457-7790

RCT-01760-M Dip Switch H Buzzer with Egress Window, Rear Door, Lift Door, Stop Request.
Saturday, April 1, 2023

EGRESS WINDOW, REAR DOOR, LIFT DOOR, ADA STOP REQUEST SETTINGS

D/SW-H Switch 1 (OFF) “Egress Window”, no monitoring with audible alarm at CN04-19.
D/SW-H Switch 1 (ON) “Egress Window”, monitoring with audible alarm at CN-04-19.
D/SW-H Switch 2 (OFF) “Rear Door”, no monitoring with audible alarm at CN04-18.
D/SW-H Switch 2 (ON) “Rear Door”, monitoring with audible alarm at CN04-18.
D/SW-H Switch 3 (OFF) “Lift Door”, no monitoring with audible alarm at CN04-22.
D/SW-H Switch 3 (ON) “Lift Door”, monitoring with audible alarm at CN04-22.
D/SW-H Switch 4 (OFF), “ADA & Stop Request”, inhibits audible alarm at CN08-39 and CN08-40.
D/SW-H Switch 4 (ON), “ADA & Stop Request”, enables audible alarm at CN08-39 or CN08-40.

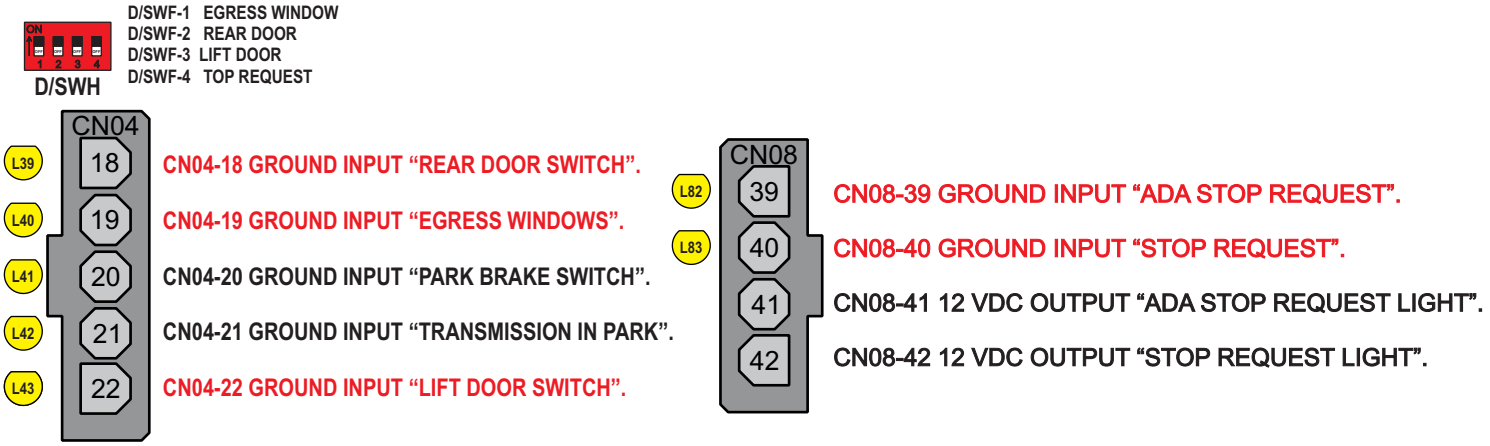

LOCATION: BOTTOM LEFT SIDE OF RCT-01760-M

1. NOTE: Switch 4 “OFF”, inhibits audible alarms from “ADA CN08-39” and “Stop Request CN08-40”.
2. NOTE: Switch 4 “ON”, enables audible alarms from “ADA CN08-39” or “Stop Request CN08-40”.

R.C. TRONICS, INCORPORATED

WWW.RCTRONICS.COM

2573 EAST KERCHER ROAD GOSHEN, INDIANA 46526
PHONE: 1-574-642-3857 FAX: 1-574-642-3858
TOLL FREE: 1-866-457-7790 dchiddister@rctronics.com

POWER CENTER RCT-01760 DATA CABLE

J1 and J2, Cable Interface between Power Center PCB and Dash Switch PCB

***J1-01* --** Ignition (+12 VDC) ---(To J3-8 and J3-7)
***J1-02* --** Buzzer Output **(NEGATIVE) (sink)**
***J1-03* --** Entry Door Light **(NEGATIVE) (sink) ---**(To J3-6)
***J1-04* --** Stop Request **(NEGATIVE) (sink) ---**(To J3-5)
***J1-05* --** Rear Door Light **(NEGATIVE) (sink) ---**(To J3-4)
***J1-06* --** Egress Windows **(NEGATIVE) (sink) ---**(To J3-3)
***J1-07* --** ADA Stop Request **(NEGATIVE) (sink)---** (To J3-2)
***J1-08* --** Lift Door Light **(NEGATIVE) (sink) ---**(To J3-1)
***J1-09* --** Aux. 5/A Switch **(NEGATIVE) (sink) ---**(To J4-6)
***J1-10* --** Aux 4/B Switch **(NEGATIVE) (sink)** (---To J4-7)
***J1-11* --** Aux. 4/A Switch **(NEGATIVE) (sink) ---**(To J4-8)
***J1-12* --** Aux 3/B Switch **(NEGATIVE) (sink)** (---To J4-9)
***J1-13* --** Aux. 3/A Switch **(NEGATIVE) (sink)**
***J1-14* --** Aux. 2/A Switch **(NEGATIVE) (sink)**
***J1-15* --** Aux. 2/B Switch **(NEGATIVE) (sink)**
***J1-16* --** Aux. 1 Switch **(NEGATIV)E (sink)**
***J1-17* --** Lift Solenoid Switch **(NEGATIVE) (sink)**
***J1-18* --** Dome Light Switch **(NEGATIVE) (sink)**
***J1-19* --** Entry Door Close Switch **(NEGATIVE) (sink)**
***J1-20* --** Entry Door Open Switch **(NEGATIVE) (sink)**

***J2-01* --** Aux. 5/B Switch **(NEGATIVE) (sink) ---(**To J4-5)
***J2-02* --** Aux. 6/A Switch **(NEGATIVE) (sink) ---**(To J4-4)
***J2-03* --** Aux 6/B Switch **(NEGATIVE) (sink) ---**(To J4-3)
***J2-04* --** Aux 7/A Switch **(NEGATIVE) (sink) ---**(To J4-2)
***J2-05* --** Aux. 7/B Switch **(NEGATIVE) (sink) ---**(-o J4-1)
***J2-06* --** Master Switch **(NEGATIVE) (sink)**
***J2-07* --** Flasher Switch **(NEGATIVE) (sink)**
***J2-08* --** Battery Negative **(-)**
***J2-09* --** Clearance Light Power (+12 VDC)
***J2-10* --** OPEN

J3 Connector, Indicating Lights

J3-1 Shift Lock **(NEGATIVE) (sink)** @ 1 ampere
J3-2 Transmission Park **(NEGATIVE) (sink)** @ 1 ampere
J3-3 Lift Enabled **(NEGATIVE) (sink)** @ 1 ampere
J3-4 Park Brake **(NEGATIVE) (sink)** @ 1 ampere

J3-5 Lift Door Open **(NEGATIVE) (sink)** @ 1 ampere
J3-6 Lift Switch On **(NEGATIVE) (sink)** @ 1 ampere
J3-7 Ignition (+12 VDC), switched)
J3-8 Ignition (+12 VDC), switched)

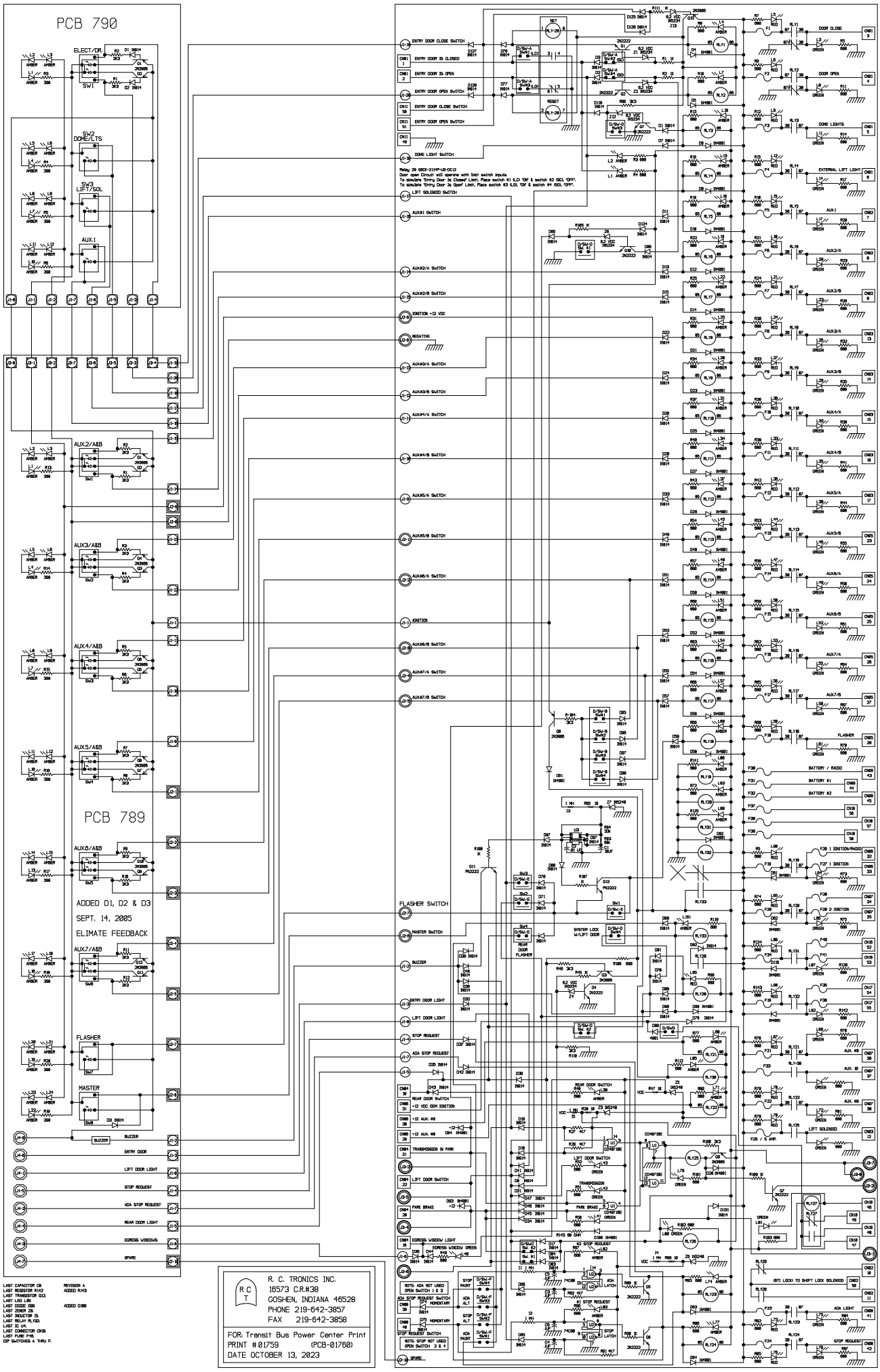
PCB 790
PCB 789
ELECT/DR.
SW1
SW2
DOME/LTS
SW3
LIFT/SOL
AUX.1
AUX2/A&B
AUX3/A&B
AUX4/A&B
AUX5/A&B
AUX6/A&B
AUX7/A&B
FLASHER
MASTER
ADDED D1, D2 & D3
SEPT. 14, 2005
ELIMATE FEEDBACK
ENTRY DOOR CLOSE SWITCH
ENTRY DOOR IS CLOSED
ENTRY DOOR IS OPEN
ENTRY DOOR OPEN SWITCH
ENTRY DOOR CLOSE SWITCH
ENTRY DOOR OPEN SWITCH
DOME LIGHT SWITCH
LIFT SOLENOID SWITCH
AUX#1 SWITCH
AUX#2/A SWITCH
AUX#2/B SWITCH
IGNITION +12 VDC
NEGATIVE
AUX#3/A SWITCH
AUX#3/B SWITCH
AUX#4/A SWITCH
AUX#4/B SWITCH
AUX#5/A SWITCH
AUX#5/B SWITCH
AUX#6/A SWITCH
IGNITION
AUX#6/B SWITCH
AUX#7/A SWITCH
AUX#7/B SWITCH
FLASHER SWITCH
MASTER SWITCH
BUZZER
ENTRY DOOR LIGHT
LIFT DOOR LIGHT
STOP REQUEST
ADA STOP REQUEST
REAR DOOR LIGHT
EGRESS WINDOWS
SPARE
DOOR CLOSE
DOOR OPEN
DOME LIGHTS
EXTERNAL LIFT LIGHT
BATTERY / RADIO
BATTERY #1
BATTERY #2
LIFT SOLENOID
ADA LIGHT
STOP REQUEST
R. C. TRONICS INC.
16573 C.R.#38
GOSHEN, INDIANA 46528
PHONE 219-642-3857
FAX 219-642-3858
FOR: Transit Bus Power Center Print
PRINT #01759 (PCB-01760)
DATE OCTOBER 13, 2023
REVISION A
ADDED R143
ADDED D180

R. C. Tronics Incorporated

2573 East Kercher Road
Goshen, Indiana 46528
Toll Free 1-866-457-7790

Phone 1-574-642-3857
Fax 1-574-642-3858
http://www.rctronics.com

DAT-01348-XXXXX
08 Conductor Data Cable

Viewed with Tyco Connector Plug-In Face Down.

Carol C-2465, 22 AWG, Stranded 7/30/8, unshielded eight conductor cable.
Cut each jacket end 4 inches long, remove jacket on each end. Add heatshrink with DAT part number.
Requires two (2) Tyco/Amp. 643814-8 connector & Tyco/Amp. 643075-8 end cap.
Place connector into insertion equipment, start with #8 and complete with #1

CHECK CABLE WITH CABLE CHECKER

#1 BLACK, #2 RED, #3 GREEN, #4 BROWN,

#5 BLUE, #6, ORANGE, #7 YELLOW, #8 WHITE

D A T	1st three Letters = Data Cable
0 0 0 0 0	2nd five numbers = Print Number
0 0	3rd two numbers = Configuration
0 0	4th two numbers = Length In Feet
0	5th last digit = Length In Inches

R. C. Tronics Incorporated

2573 East Kercher Road
Goshen, Indiana 46528
Toll Free 1-866-457-7790

Phone 1-574-642-3857
Fax 1-574-642-3858
http://www.rctronics.com

DAT-01349-06XXX
10 Conductor Data Cable

Viewed with Tyco Connector Plug-In Face Down.

Carol C-9540, 24 AWG, Stranded 7/32/10,
Foil 24 AWG Gnd shielded ten conductor cable.
Cut each jacket end 4 inches long, remove jacket on each end.
Add heatshrink with DAT part number.
Requires one (1) Tyco/Amp. 1-643814-0 connector & Tyco/Amp. 1-643075-0 end cap.
Place connector into insertion equipment, start with #10 and complete with #1

#1 GREY, #2 VIOLET, #3 BLACK, #4 RED, #5 GREEN

#6 BROWN, #7 BLUE, #8 ORANGE, #9 YELLOW, #10 WHITE

D A T	1st three Letters = Data Cable
0 0 0 0 0	2nd five numbers = Print Number
0 0	3rd two numbers = Configuration
0 0	4th two numbers = Length In Feet
0	5th last digit = Length In Inches

R. C. Tronics Incorporated

2573 East Kercher Road
Goshen, Indiana 46528
Toll Free 1-866-457-7790

Phone 1-574-642-3857
Fax 1-574-642-3858
http://www.rctronics.com

DAT-01352-XXXXX
30 Conductor Data Cable

Viewed with Tyco Connector Plug-In Face Down.

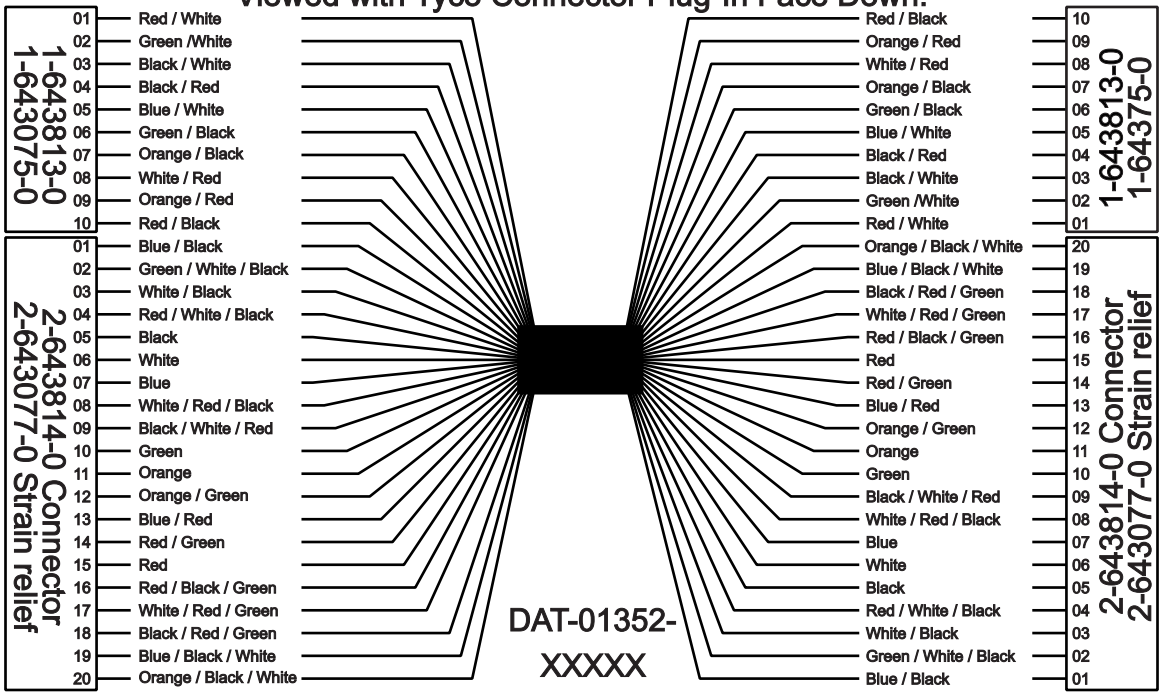

CVA-240730, Belden 9544 or Carol C-0749, 24 AWG,
Stranded 7/32/30, Foil 24 AWG Gnd shielded thirty conductor cable.
Cut each jacket end 4 inches long, remove jacket on each end.
Add heatshrink with DAT part number._
Cut 3/4 inch of ½ inch heat shrink, place over cut cable jacket, shrink with heat gun.
Requires two (2) Tyco/Amp. 1-643814-0 connector & Tyco/Amp. 1-643075-0 end cap.
Requires two (2) Tyco/Amp. 2-643814-0 connector & Tyco/Amp. 2-643075-0 end cap
Place connector into insertion equipment, start with #30 and complete with #1
Terminate with .250 female tab on one end only.

CHECK CABLE WITH CABLE CHECKER

#1 RED/WHITE, #2 GREEN/WHITE, #3 BLACK/WHITE, #4 BLACK/RED, #5 BLUE/WHITE#6 GREEN/BLACK, #7 ORANGE/BLACK, #8 WHITE/RED, #9 ORANGE/RED, #10 RED/BLACK#11 BLUE/BLACK, #12 GREEN/WHITE/BLACK, #13 WHITE/BLACK, #14 RED/WHITE/BLACK#15 BLACK, #16 WHITE, #17 BLUE, #18 WHITE/RED/BLACK #19 BLACK/WHITE/RED#20 GREEN, #21 ORANGE, #22 ORANGE/GREEN, #23 BLUE/RED, #24 RED/GREEN, #25 RED#26 RED/BLACK/GREEN, #27 WHITE/RED/GREEN, #28 BLACK/RED/GREEN, #29 BLUE/BLACK/WHITE, #30 ORANGE/BLACK/WHITE

D A T	1st three Letters = Data Cable
0 0 0 0 0	2nd five numbers = Print Number
0 0	3rd two numbers = Configuration
0 0	4th two numbers = Length In Feet
0	5th last digit = Length In Inches

R. C. Tronics, Incorporated

2573 East Kercher Road
Goshen, Indiana 46528
Toll Free: 1-886-457-7790

Phone: 1-574-642-3857
Facsimile: 1-574-642-3858
https://www.rctronics.com

RCT-01760-H, ADA LIFT SYSTEM, TROUBLE-SHOOTING.

Monday, November 20, 2023

1. CN04-20, ENSURE AMBER INDICATOR ILLUMINATED (L41), **"PARK BRAKE SWITCH".**
2. CN04-21, ENSURE AMBER INDICATOR ILLUMINATED (L42), **"TRANSMISSION PARK".**
3. CN04-22, ENSURE AMBER INDICATOR ILLUMINATED (L43), **"LIFT DOOR OPEN".**
4. OPERATE, **"LIFT SWITCH, "ON".** (INPUT, J1-17 & D19, LEFT SIDE).
5. **NOTE: GREEN LED (L93) & AMBER LED (L79) INDICATORS ILLUMINATED.**

NOTE 1: With all five led illuminated the control will present +12 vdc at, CN03-12, **"LIFT SOLENOID OUTPUT", (GREEN LED, (L93).**

NOTE 2: "LIFT DOOR SWITCH", circuit path is from switch, dash PCB to, J1-17 and then to D19, left side. This is a sink, (ground or vdc common). Check to verify if step number 5 is not present.

NOTE 3: With the above steps complete, inputs verified, one of two conditions exist.

- Power Supply is Defective, (VR1)
- Integrated Circuit is Defective, (U1).

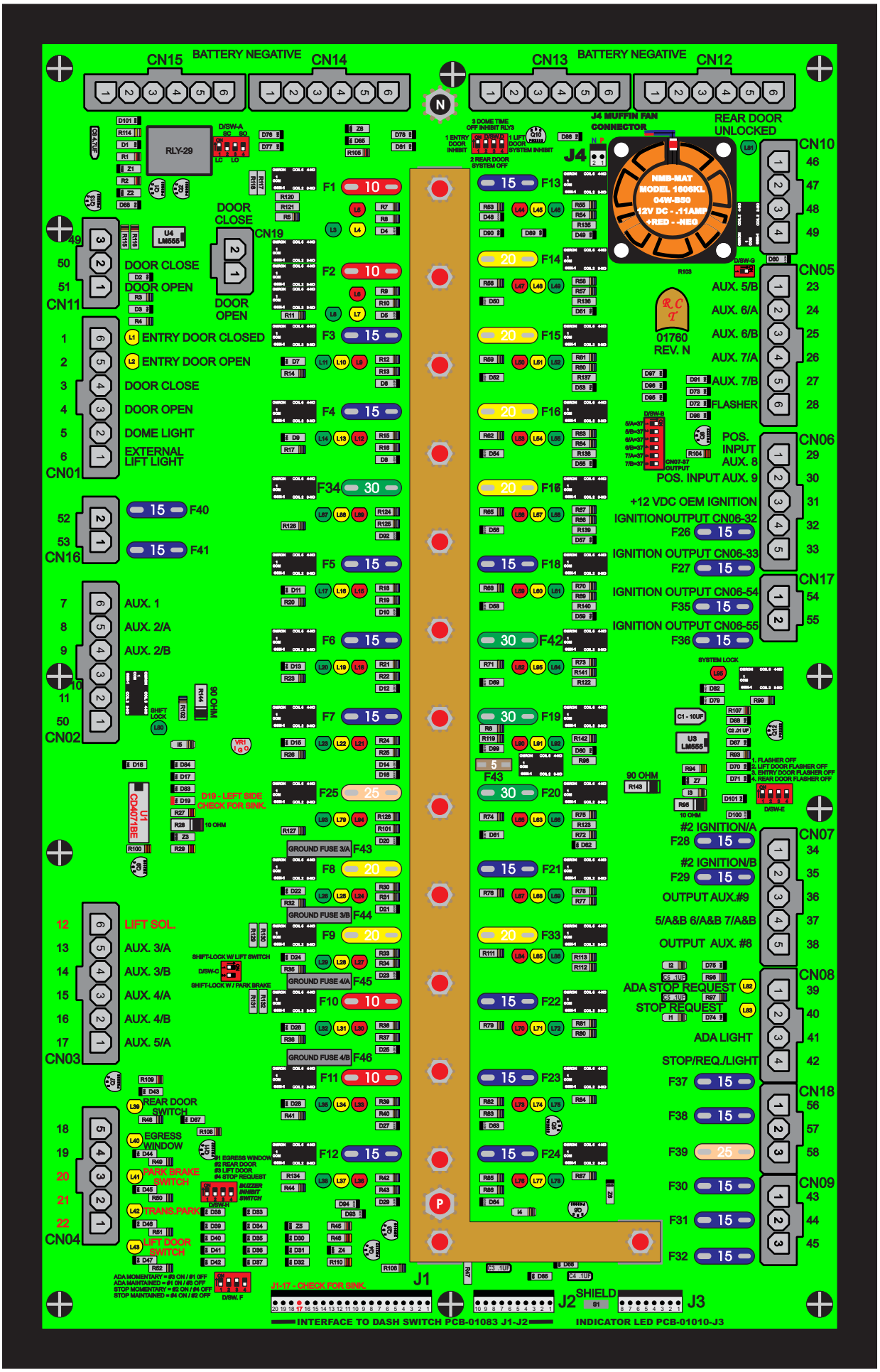
CN15
BATTERY NEGATIVE
CN14
CN13
BATTERY NEGATIVE
CN12
RLY-29
D/SW-A
DOOR CLOSE
DOOR OPEN
CN19
U4 LM555
CN11
DOOR CLOSE
DOOR OPEN
ENTRY DOOR CLOSED
ENTRY DOOR OPEN
DOOR CLOSE
DOOR OPEN
DOME LIGHT
EXTERNAL LIFT LIGHT
CN01
CN16
AUX. 1
AUX. 2/A
AUX. 2/B
CN02
SHIFT LOCK
90 OHM
U1 CD4071BE
D18 - LEFT SIDE CHECK FOR SINK
10 OHM
LIFT SOL.
AUX. 3/A
AUX. 3/B
AUX. 4/A
AUX. 4/B
AUX. 5/A
CN03
SHIFT-LOCK W/ LIFT SWITCH
D/SW-C
SHIFT-LOCK W/ PARK BRAKE
REAR DOOR SWITCH
EGRESS WINDOW
PARK BRAKE SWITCH
TRANS.PARK
LFT DOOR SWITCH
CN04
ADA MOMENTARY = #3 ON / #1 OFF
ADA MAINTAINED = #1 ON / #3 OFF
STOP MOMENTARY = #2 ON / #4 OFF
STOP MAINTAINED = #4 ON / #2 OFF
D/SW. F
#1 EGRESS WINDOW
#2 REAR DOOR
#3 LFT DOOR
#4 STOP REQUEST
BUZZER INHIBIT SWITCH
D/SW-H
J1-17 - CHECK FOR SINK
J1
J2
SHIELD
J3
INTERFACE TO DASH SWITCH PCB-01083 J1-J2
INDICATOR LED PCB-01010-J3
3 DOME TIME OFF INHIBIT RLY3
1 ENTRY DOOR INHIBIT
1 LIFT DOOR INHIBIT
SYSTEM INHIBIT
2 REAR DOOR SYSTEM OFF
J4 MUFFIN FAN CONNECTOR
NMB-MAT MODEL 1606KL 04W-B50 12V DC - .11AMP +RED - -NEG
REAR DOOR UNLOCKED
CN10
CN05
AUX. 5/B
AUX. 6/A
AUX. 6/B
AUX. 7/A
AUX. 7/B
FLASHER
CN06
POS. INPUT AUX. 8
POS. INPUT AUX. 9
+12 VDC OEM IGNITION
IGNITIONOUTPUT CN06-32
IGNITION OUTPUT CN06-33
IGNITION OUTPUT CN06-54
IGNITION OUTPUT CN06-55
CN17
01760 REV. N
SYSTEM LOCK
C1 - 10UF
U3 LM555
90 OHM
1. FLASHER OFF
2. LIFT DOOR FLASHER OFF
3. ENTRY DOOR FLASHER OFF
4. REAR DOOR FLASHER OFF
D/SW-E
#2 IGNITION/A
#2 IGNITION/B
OUTPUT AUX.#9
5/A&B 6/A&B 7/A&B
OUTPUT AUX. #8
CN07
ADA STOP REQUEST
STOP REQUEST
ADA LIGHT
STOP/REQ./LIGHT
CN08
CN18
CN09
GROUND FUSE 3/A
GROUND FUSE 3/B
GROUND FUSE 4/A
GROUND FUSE 4/B

R. C. Tronics, Incorporated

Specializing In Electronic Controls

2573 East Kercher Road
Goshen, Indiana 46528
https://www.rctronics.com

Phone: 1-574-642-3857
Fax: 1-574-642-3858
Toll Free: 1-866-457-7790

RCT-01760-M
TRANSIT BUS BOOKLET

R C
T

Custom Design of Electronic Controls

Printed Circuit Board Layout

Complete Manufacturing Facilty

RCT Can Solve Your Electrical /Electronic Control Requirements